Gravity Feed Handler
TYPE 6 MSOP Series
User's Manual

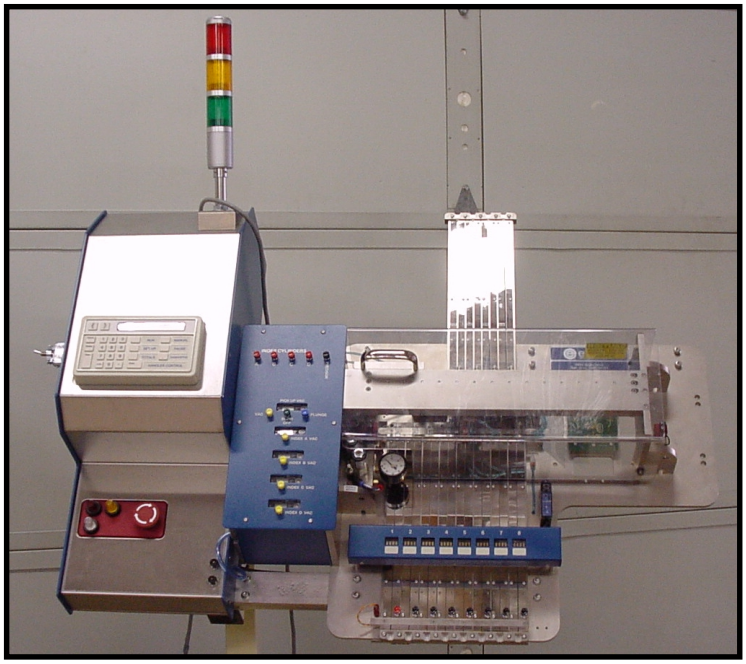

Version 1.0
March 19, 2001

Exatron, Inc.
2842 Aiello Drive
San Jose, California 95111
(408) 629-7600 Tel
(800) EXA-TRON Tel
(408) 629-2832 Fax
www.exatron.com

TABLE OF CONTENTS

Chapter 1 Overview and Safety

Please read and understand this entire Users' manual before installing or using your Exatron handler. The following safety procedures must be followed at all times.

Exatron Safety Features

MECHANICAL HAZARDS – BODILY INJURY HAZARDS

WARNING: The Exatron model MSOP system uses servo-motor driven lead screws to move devices. These motors are **VERY POWERFUL** and can cause **SEVERE INJURY** if the carriages or pick up head pinch part of a human body or any extraneous item.

In order to avoid any such circumstance, the MSOP series is equipped with fixed and moving covers. The fixed covers are screwed in place and should never be removed except for maintenance and only then by qualified maintenance technicians. The moveable covers are supplied with interlocks. If the cover is opened, power to the motors will be cut off and the motor will stop.

Exatron specifically disclaims responsibility and/or liability for any injury which occurs as a result of any interlock being defeated and/or bypassed, or for any injury which occurs as a result of any fixed cover being removed during operation.

COMPRESSED AIR

Your Exatron handler will require a compressed air supply. This handler should be supplied with compressed air at between 80 (+/- 3 PSI) and will require 3 CFM for proper operation. The air supply must be clean and dry to operate correctly. Dirty, oily or wet air will cause the vacuum generator to malfunction and will make your system unreliable.

Using compressed air can be hazardous. It is the responsibility of the customer to properly train all handler operators in every aspect of the safety practices associated with the use of compressed air.

NEVER operate any Exatron system which requires compressed air without an approved air regulator and shutoff valve, such as that originally supplied with your system.

Exatron Support Services

Toll-Free Telephone Customer Service Line

For factory technical support, call 1-800-EXA-TRON, between 8:00 A.M. and 5:00 P.M. Pacific time, Monday through Friday. When calling, please have your EXATRON equipment close at hand, along with the following information:

- The **exact wording** of any messages that appeared on your handler display.
- A description of what happened and what you were doing when the problem occurred.
- A description of how you tried to solve the problem.

Standard Warranty

All EXATRON products are under warranty for one year from the date of purchase. EXATRON agrees to repair any mechanical or electrical assembly, subassembly, or entire unit which fails during normal use within its first year. The Customer agrees to follow the recommended maintenance procedure as defined in the User's Manual.

EXATRON DOES NOT warrant test contactors. Handler test contactors are fragile and may be easily ruined by operator abuse. EXATRON uses the finest materials available in our contactor designs.

All warranty work must be performed at the EXATRON factory or at an authorized Representative Service location. As described on the following page, in-house service by our customers is encouraged.

EXATRON does not warrant the following:

1. Damage caused by improper packaging of equipment returned to EXATRON for repair.
2. Damage caused by the freight forwarder.
3. Damage caused by acts of God: flood, fire, earthquake, etc.
4. Damage caused by equipment connected to improper power line voltages.
5. Operator abuse.
6. Interface hardware not manufactured by EXATRON.
7. Test contactors.
8. Damage caused by equipment connected to improper air supply:contaminated with oil,water, dirt, etc.

AUTHORIZED CUSTOMER SERVICE CENTERS

EASTERN UNITED STATES:	JOHN TIERNEY BOSTON MICRO 65 CARDIGAN ROAD TEWKSBURY, MA 01876 (978) 640-1980 FAX: (978) 640-1968
EUROPE/U K:	ROY QUAIFE, PAUL CHANDLER CHARNTEC ELECTRONICS UNIT 9 PAXTON BUSINESS CENTRE WHITTLE ROAD CHURCHFIELDS INDUSTRIAL ESTATE SALISBURY, WILTSHIRE SP2 7YR ENGLAND 011-44-1722-333389 FAX: 011-44-1722-416232
JAPAN:	KOJI YAOITA DIRECTOR OF SALES GENERAL BUSSAN CO., LTD. 2-18-2, NAKANO 2-CHOME NAKANO-KU, TOKYO 164-0001 JAPAN 011-81-33-383-1711 FAX: 011-81-33-383-1719

Customer In-House Service

Except in the case of Laser Marking Systems, EXATRON encourages customer in-house equipment service and tries to make in-house service as easy as possible to perform. There are no "Void Warranty" warning stickers on EXATRON handlers. EXATRON will even honor the warranty on a unit when an in-house repair attempt leads to further damage to the unit. By using the built-in diagnostic software and diagnostic tools, it is usually possible for the operator to isolate a problem quickly and effect a repair.

Offshore Warranty Service

An EXATRON Handler purchased in the United States and then shipped offshore will be warranted through EXATRON in California. Replacement parts are furnished for a period of one year from date of purchase with the exception of replacement contactors. In most cases, it will not be necessary to return the worn part from the offshore user location.

To receive offshore service support, the handler must be purchased through your local EXATRON Representative or an extended warranty agreement must be purchased directly from your local EXATRON Representative.

Please supply the following information when requesting offshore service or replacement parts:

1. The part number(s) required. If the part number is not known, photocopy the part and fax it to EXATRON.
2. The Model number of the Handler.
3. The type of device being run by the Handler, such as: DIP, SOIC, SOJ, PLCC, LCC, SIP, PGA, PCB, ZIP, etc.
4. The Handler's serial number.
5. The full shipping address.
6. Any special shipping or customs instructions.
7. Method of shipment, such as: Federal Express, UPS, DHL, U.S. Mail, or the name of your chosen freight forwarder.

In most cases, faxed requests and shipment of replacement parts orders are processed within twenty-four hours of receipt by EXATRON.

Also Available From Exatron:

The Model 3000B

with Eight Automatic Inputs

EXATRON'S eight-tube Octoloader is an ambient automatic eight-tube loader. The standard Model 3000B comes equipped with this octoloader which is a moving metal plate holding up to eight tubes of devices, controlled by the handler's CPU by means of a stepper motor. The plate automatically moves both left and right, positioning each tube of devices over the handler input track. When the input track is emptied, the octoloader automatically searches for tubes with devices. The octoloader has a sensor mounted at its junction with the input track. The octoloader can "see" a device jam and stop its own movement to prevent breaking the jammed device. The octoloader also has an automatic "wiggle" jam-clearing operation which it will implement immediately in an effort to remove the jam without operator assistance.

Model 3000B octoloaders use a Snap-On plate which is specifically fitted with tube holders for a given device application.

All Model 3000B Handlers not intended to be used on a "FRED," (Free Rolling EXATRON Dolly) are supplied with bench-top base plates which must be bolted directly to a bench or table top to secure the handler. Each plate includes two sets of tilt bars which enable the handler's tilt angle to be altered for specific applications. The tilt angle is critical for ceramic DIPs and LCCs since too much drop angle may cause chipping of the packages.

The Model 3010B

with One Elevated Temperature Track

The Model 3010B Hot Rail adds a single track hot rail to the input of the handler. This track holds twenty inches of devices in order to preheat them prior to test. The temperature range of the Hot Rail is ambient to +125° C. AC heaters are located within the Hot Rail. Exceptional temperature control is maintained by constantly monitoring four points in the Rail and four points in the Test Site. The guaranteed accuracy is ±3° C everywhere in the Soak Rail and ±2° C in the Test Site. All four "zones" in the hot rail are controlled by an EXATRON-designed computerized temperature controller.

The input of the Hot Rail has a manually operated two-input tube holder assembly.

All Model 3010B Handlers are supplied with a Free Rolling EXATRON Dolly ("FRED.") For operation, the handler is to be mounted onto this floor stand which has four large tires for easy positioning and four floor jacks to lock it into place.

The Model 2000B

with Two-Tube Manual Input

The Model 2000B is an ambient handler with a manually operated two-input tube holder assembly for low to mid-volume handling applications. The tube holder must be manually shifted when one tube of devices empties in order to present another tube of devices to the input track. The Model 2000B uses Snap On Change Over Kits to accommodate various size packages. The tube holders are custom-machined to a specific tube size and are included as standard equipment with Model 2000B Snap On Change Over Kits.

All Model 2000B Handlers are supplied with bench-top base plates which must be bolted directly to a bench or table top to secure the handler. Although smaller and less expensive than our Model 3000B, the 2000B Series handlers are equipped with a broad range of features found in all EXATRON handlers including:

- Wide Variety of Device Handling Capability
- Quick Changeovers Using Modified Snap-On Change Kits
- Variety of Interfaces
- Positive Binning
- Plunge to Board Test Contact Mechanism
- ESD Safeguards

The Model 5000

Series of Production Handling Systems

The 5000 Series of production handlers integrate any combination of customer-specified ambient temperature programming/test sites, hot chamber(s), elevated temperature test site(s) and a "smart" laser marking system. In addition, automatic tube loader/reloader components from various manufacturers may be integrated into EXATRON'S Model 5000 when the laser marking system option is specified.

When equipped with a laser marker, the entire system is controlled by a single 80486/33 computer.

One or more test sites are available on all of the various Model 5000 configurations. The EXATRON Model 5000 Series of Heavy-Duty Handling Systems are ideal for automating high-volume program, test, and mark applications.

Warning/Caution Labels

YOUR NEW EXATRON HANDLER WILL ARRIVE WITH SOME OR ALL OF THE FOLLOWING WARNING LABELS ATTACHED:

EXATRON PART NUMBER	LABEL TEXT
LAB03-001	DANGER - INVISIBLE LASER RADIATION WHEN OPEN ...
LAB03-004	DANGER - ELECTRICAL HAZARD
LAB03-006	CAUTION - DO NOT OPERATE WITHOUT GUARDS ...
LAB03-007	DANGER - WATCH YOUR HANDS AND FINGERS
LAB03-008	CAUTION - BEFORE CLEANING OR SERVICING ...
LAB06-001	CAUTION - HIGH TEMPERATURE
LAB09-001	THIS UNIT SOLD AND SERVICED BY ...
LAB09-002	WARNING! DON'T REMOVE WITH HANDLER POWER ON
(IN-HOUSE ONLY)	THIS ORDER CONTAINS PARTICLE INTERCONNECT ...
5000-494	DANGER - DO NOT REMOVE OR DETACH ...
5000-958	CAUTION - HIGH PRESSURE AIR SOURCE
5000-967	CAUTION - CONTAINS HOT SURFACES

Availability of Warning Labels:

Current laws pertaining to the cautionary labels required to be installed on electronic equipment vary from state to state. EXATRON makes every attempt to comply with all known labeling laws and safety considerations as they relate to our component handling systems. In effect, virtually every surface of the handler could be covered with warning signs and labels. For aesthetic reasons, we choose to produce a machine with a less cluttered appearance, while still providing adequate visual caution indicators.

Individual customers may wish to obtain additional labels to facilitate safe operation and service for this or other electronic equipment in use at their locations. The labels listed above may be purchased from the EXATRON factory as desired. Our toll-free telephone number is 1-800-EXA-TRON.

HANDLER SETUP

UNCRATE THE HANDLER

The Type 6 handler will usually come in a wooden crate which will require some disassembly to remove the handler. Please inspect the system when it is removed from the crate for any obvious damage which may be the result of shipping. Contact Exatron and the shipping company immediately should you see any damage.

MOUNTING THE TEST SITE

Mounting the test site for the Type 6 handler is fairly simple. The test site interface board is shipped from the factory already installed. Simply hookup the tester communication cable to the interface board.

PRESSURIZED AIR SOURCE

The MSOP system requires a supply of pressurized air at 80PSI (+/- 3 PSI). This air must be clean and dry. The external air source should be attached to the air regulator mounted on the Handler base. Check to make sure the air regulator gauge on the external regulator measures the air pressure at 80PSI, adjust if necessary.

Exatron supplies the ¼ - 20 type “M” air fitting for the regulator.

POWERING UP AND SYSTEM SETUP

1. Turn the handler on. Do not load any parts into the system.
2. Wait. The servo motor will home and then set to the zero position.
3. Once the motor has zeroed, enter setup by pressing the **[SETUP]** key on the remote microterminal.

MENU

The following menu describes the various handler setup features available from the front panel microterminal interface. These setup features allow significant changes to be made to the operation of the handler system.

!! EXERCISE EXTREME CAUTION WHEN CHANGING ANY SETTING FROM THE FRONT PANEL. IT IS POSSIBLE TO SIGNIFICANTLY ALTER THE OPERATIONAL CHARACTERISTICS OF YOUR HANDLER BY WAY OF THE FRONT PANEL.

Setup has three main categories:
1. Modifying the Setup of the system.
2. Resetting the Total Counts
3. Changing the RAM

These categories and their sub-categories are described briefly in the menu tree below. Further information on these categories is available elsewhere in this manual. Appropriate references will be included in the text.

A note on the syntax of the display messages: In some cases, the handler setup message will be in the form of a question and then will be proposing and answer, thus: **MOD SET UP ? NO**. This question asks

whether to change any of the setup parameters of the handler, and it proposes the answer no. It is possible to toggle the answer to such questions, and then accept those changed answers.

Also, any text within brackets **[ ]** indicates a key on the microterminal.
Example: **[Enter]** means to press the enter key.

Any messages on the display will be printed in reverse video.
Example**:** **READY TO RUN**

EXAMPLE OF MICROTERMINAL

STARTING THE SETUP PROCEDURE

METHOD 1
Use this method when the handler is already powered on.
First make sure the display reads:

READY TO RUN

Depending on the status of the handler the display may also read:

EMPTY/LOAD PARTS or
EMPTY ALL TRACKS

The yellow light on the lightpole will be lit.
Now press the **[SET UP]** key on the microterminal.

The display will read **CHANGE RAM? NO** .
Press **[Enter]** .

The display will read **RESET TOTALS NO** .
Press **[Enter]** again.

The display will read **MOD SETUP NO** .

The **[SETUP]** key will toggle between **MOD SETUP NO ?** and **MOD SETUP YS ?**

Press the **[SETUP]** key to change the display to **MOD SETUP YS ?**
Press the **[Enter]** to start Modification Setup.
Now proceed with the instructions under the heading MOD SETUP YS ? later in this chapter.

METHOD 2
To enter the setup menu from power up, do the following.
Turn the handler on. Do not load any parts into the system.
The display will do a self test and sign on.

V0 2.00 Test Ok

TYPE 6-2 02-14-01

The motor will then home.

HOME PICKUP

SERVO IS AT 0

The handler will then check that the index pickup sites are clear. If parts are present they will be picked and transferred to the flush bin.

The display will then read: **MOD SETUP NO ?**

The **[SETUP]** key will toggle between **MOD SETUP NO ?** and **MOD SETUP YS ?**

Press the **[SETUP]** key to change the display to **MOD SETUP YS ?**

Press the **[Enter]** to start Modification Setup. Display will read **T SITE = _ _ _ _ _**

If the **[Enter]** or **[SETUP]** key is not pressed, the microterminal will "time out" in five seconds and proceed to run mode. The display will read **READY TO RUN** .

Continue with the section entitled MOD SETUP YS ? to complete setup.

MOD SET UP ? NO

There is a five second time out delay. If no action is taken within 5 seconds the handler will assume no modification of the setup is necessary and will continue to **READY TO RUN**.

The settings which are accessed by this front panel selection determine certain handler operating conditions, such as what interface to use in communicating with outside programmers or testers, whether to stop when a failed device is detected, etc.

[SET UP] key toggles to **MOD SET UP ? YS** .

[Enter] key displays:

T SITE = _ _ _ _ _

This setup option sets the number of motor steps from the zero point to the test site. The factory default is 46585.

Enter changes to the Test Site step count using the controller keypad number keys. The handler allows changes to each digit from lowest to highest in order. First enter Ones, then Tens, then Hundreds, etc.

For example: to enter a step count of 54321 devices, press **[1]**, then **[2]**, then **[3]**, then **[4]**, then **[5]**. The display will read: **T SITE = 54321** .

Press the **[Clear]** key to erase your entry.
Press the **[Enter]** key to set this number into memory and proceed to the next setup option.

FULL TUBE = _ _ _ _

This setup option sets the number of parts for a full output tube. The factory default is 0050.

Enter changes to the Full Tube count using the controller keypad number keys. The handler allows changes to each digit from lowest to highest in order. First enter Ones, then Tens, then Hundreds, etc.

For example: to enter a tube count of 4321 devices, press **[1]**, then **[2]**, then **[3]**, then **[4]** .
The display will read: **FULL TUBE = 4321** .

Press the **[Clear]** key to erase your entry.
Press the **[Enter]** key to set this number into memory and proceed to the next setup option.

PICK INTERFACE ?

[1] key chooses and displays: **HANDLER PORT**
[2] key chooses and displays: **EXATRON SUPER**
[3] key chooses and displays: **EXATRON RS-232**
[4] key chooses and displays: **PROGRAM RS-232**

(Please refer to Interface chapter of the manual for explanation of various interface options.)

[Clear] key rejects selection and returns to **PICK INTERFACE ?**
[Enter] key accepts selection and proceeds to **STOP ON FAIL ?**

STOP ON FAIL ?

[1] key chooses **YES**
[2] key chooses **NO**

[Clear] key rejects selection and returns to **STOP ON FAIL ?**
[Enter] key accepts selection and exits Setup mode.

The system is now ready to run parts.

RESET TOTALS NO

The handler maintains certain counts relating to the number of parts processed, etc. These counts are stored in the RAM of the handler controller. Choosing this option will zero out these RAM counts, but will not effect any of the RAM settings which can be set by the **CHANGE RAM?** option described later in this chapter.

First make sure the display reads:

READY TO RUN

Depending on the status of the handler the display may also read:

EMPTY/LOAD PARTS or
EMPTY ALL TRACKS

The yellow light on the lightpole will be lit.
Now press the **[SET UP]** key on the microterminal.

The display will read **CHANGE RAM? NO** .

Press **[Enter]** .

The display will read **RESET TOTALS NO** .

[SET UP] key toggles to **RESET TOTALS YS** .

[Enter] key accepts reset command, briefly displays the message **TOTALS SET TO 0**, then moves to **MOD SET UP ? NO**

CHANGING THE RAM DATA

The Model MSOP system allows the operator to change the RAM of each handler CPU.
To access the Change RAM Mode:

Press the **[SET UP]** key. The message **CHANGE RAM? NO** will appear.

Press the **[SET UP]** key again. The message **CHANGE RAM? YES** will appear.

Press **[Enter]**. The message **LOAD DEFAULT NO** will appear. If you choose **LOAD DEFAULT NO**, the handler will leave all RAM addresses as they were. From here, you may proceed in either of two directions:

a. If you wish to make specific changes to the RAM, press **[Enter]** again. You have chosen not to load the default (ROM) values. The display will read, "**0090DATA 01**"

b. If you do wish to set the RAM with ROM values, press the **[SET UP]** key. The message **LOAD DEFAULT YES** will appear. Press **[Enter]**.

When you choose **LOAD DEFAULT YES**, the handler loads all default addresses from the EPROM to the RAM. This is called **"Blasting the RAM"** After you have loaded the EPROM into the RAM, you may still make specific RAM changes if you wish, as described below.

1. Press the **[SET UP]** key or the **[TOTALS]** key to scroll through the firmware addresses:
   The **[SET UP]** key will scroll the address up.
   The **[TOTALS]** key will scroll the address down.

2. When you reach the firmware address desired, press the **[Space]** key to increment the upper data nibble in any individual address, as desired. Press the **[Delete]** key to increment the lower data nibble in any individual address, as desired.

   The minus key, **[–]**, sets a specific address to FF. The zero key **[0]**, sets a specific address to 00.

NOTE: Pressing the [Clear] key loads the default value from the EPROM into the RAM for a specific address only.

3. To exit the Change RAM mode, press the **[Enter]** key.
   The message **MOD SET UP? NO** will appear.

4. If you wish to modify any of the set-up information you just entered, press the **[SET UP]** key to display "**MOD SET UP? YES**" and make your corrections now.

5. If not, press **[Enter]** again to return to the previous mode.

NOTE: Make certain to write down and retain any changes you make to the RAM. If you do not, you will regret this later. Permanent selections should be programmed into the EPROM. Please contact Exatron for assistance in doing so. Our toll-free telephone number is 1-800-EXA-TRON.

The following table describes each firmware address in numerical order. This information is current as of the date of this manual. A system-specific RAM setting printout should appear at the end of this chapter which will have the RAM settings as they were saved in the EPROM on this system when it shipped from Exatron. As a result, some of the settings shown below may not +agree with those on your system. Use the listing at the end of this chapter for settings specific to your handler.

TABLE 1			Handler RAM	
Adrs	**Description**	**ROM**	**RAM Op**	**Comments**
008F	Type6-2 02-14-01	1	N/A	Sign on message. Not to be modified by user.
0090	Handler Type	00	00	TYPE 6 Handler
0091	Head Up Sensor Option	00	00, FF	FF= No sensor, 00 = Head up sensor present.
0092	Full Tube 1000s	30	30 to 39	Set the 1000s digit for number of devices constituting a full tube (ASCII)
0093	Full Tube 100s	30	30 to 39	Set the 100s digit for number of devices constituting a full tube (ASCII)
0094	Full Tube 10s	35	30 to 39	Set the 10s digit for number of devices constituting a full tube (ASCII)
0095	Full Tube 1s	30	30 to 39	Set the 1s digit for number of devices constituting a full tube (ASCII)
0096	Precisor On/Off	FF	00, FF	Index Precisor. On = 00, Off = FF
0097	Start Test Delay	10	00 to FF	Time delay for test site solenoids to close. Counts down in HEX to determine the time delay in milliseconds.
0098	Start Pulse Width	14	00 to FF	Adjust the start test pulse width. This is allowed to provide flexibility in interfacing between the handler and tester/programmers. Counts down in HEX in 1 millisecond steps.
0099	Remote Go	FF	00, FF	For EXATRON SUPER Interface only. To run the system using the PC as the controller and EXATRON-supplied system software, set this address to 00. To run the system **without** using the PC as the controller, set this address to FF.
009A	Count Mask	00	00, 10	Allows the operator to designate a bin or bins that will ignore the pre-defined full tube count. This is useful when using bulk/bucket outputs. For example, bit map 10 = Sort 5.
009B	Baud Rate RS-232	0C	See Table in Interface Chapter	Stores the baud rate of the RS-232 interface between the handler system and the PC. Must be set to 0C for EXATRON SUPER Interface.
009C	Data Format	07	See Table in Interface Chapter	Stores the parity/stop/data bits. Must be set to 03 for EXATRON SUPER Interface.
009D	½ " or 1" Pitch	00	00, FF	00 = 1" Pitch, FF = ½" Pitch.
009E	Time Out	20	00, FF	A timed delay before the handler aborts the test and turns off all solenoids. Counts down in HEX in 1 second steps. When this address is set to 00, the system will never time out.
009F	Test Site Steps 10,000's	4	(ASCII)	Set the 10,000's digit for number of motor steps from zero point to test site. (ASCII)
00A0	Test Site Steps 1,000's	6	(ASCII)	Set the 1,000's digit for number of motor steps from zero point to test site. (ASCII)
00A1	Test Site Steps 100's	6	(ASCII)	Set the 100's digit for number of motor steps from zero point to test site. (ASCII)
00A2	Test Site Steps 10's	1	(ASCII)	Set the 10's digit for number of motor steps from zero point to test site. (ASCII)
00A3	Test Site Steps 1's	5	(ASCII)	Set the 1's digit for number of motor steps from zero point to test site. (ASCII)
00A4	Reserve A4			Not Used At This Time.
00A5	Reserve A5			Not Used At This Time.

00A6	Check Sort Reset	FF	00, FF	Enable the handler to check whether all sort signals are OFF at the start of the test. To enable this option, set this address to 00. To disable this option, set this address to FF. Set this to FF especially when using LED checker boxes for simulation purposes.
00A7	Reserve A7			Not Used At This Time.
00A8	Reserve A8			Not Used At This Time.
00A9	Reserve A9			Not Used At This Time.
00AA	Stop on Fail Y/N	30	30, FF See Display Diction-ary for further details.	Set to 30: Upon receipt of a fail signal from the tester, the handler will place the device into the pre-assigned fail tube. Set to FF: After the handler receives a fail signal from the tester, the handler will stop with the contacts closed. This will allow the operator to inspect contact alignment or increase/de- crease contact pressure.
00AB	Reserve AB			Not Used At This Time.
00AC	Reserve AC			Not Used At This Time.
00AD	D Test ASCII Out	D	See Interface Chapter for further details.	This is the ASCII letter which the EXATRON RS-232 interface uses as an output on a double test. Set to S: Normal. Set to D: Handler will issue S on First Test Cycle and D on Double Test Cycle.
00AE	Reserve AE			Not Used At This Time.
00AF	Reserve AF			Not Used At This Time.
00B0	Reserve B0			Not Used At This Time.
00B1	Reserve B1			Not Used At This Time.
00B2	Reserve B2			Not Used At This Time.
00B3	Reserve B3			Not Used At This Time.
00B4	Reserve B4			Not Used At This Time.
00B5	Reserve B5			Not Used At This Time.
00B6	Reserve B6			Not Used At This Time.
00B7	Reserve B7			Not Used At This Time.
00B8	Reserve B8			Not Used At This Time.
00B9	Reserve B9			Not Used At This Time.
00BA	Reserve BA			Not Used At This Time.
00BB	Stop-Fail Sort	00	00 to FF	Tells the handler which test sorts to stop operation on Fail signal if desired. 00 = Stop on Fail feature is OFF for all sorts. FF = Stops on Fail for ALL devices. FE = Sort 1 is PASS and all other sorts are Stopped upon Fail.
00BC	Double Test Sort	00	00 to FF	Tells the handler which test sorts to double test if desired. 00 = Double Test OFF for all sorts. FF = Double Tests ALL devices. FE = Sort 1 is PASS and all other sorts are Double Tested.
00BD	Send H on Retest	FF	00, FF	When this option is set to 00, the system will send an “H” signal (initiating communication) to the tester at the start of a second test of a device. When set to FF, the system will not send an “H” before a second test cycle.
00BE	Reserve BE			Not Used At This Time.
00BF	Reserve BF			Not Used At This Time.
00C0	Sort 1 Bins 1-8	7F	00 to FF	Input Sort 1 to handler output bins. BIT MAP. Output cover LEDs will blink output sort locations.
00C1	Sort 2 Bins 1-8	80	00 to FF	Input Sort 2 to handler output bins. BIT MAP. Output cover LEDs will blink output sort locations.
00C2	Sort 3 Bins 1-8	80	00 to FF	Input Sort 2 to handler output bins. BIT MAP. Output cover LEDs will blink output sort locations.
00C3	Sort 4 Bins 1-8	80	00 to FF	Input Sort 2 to handler output bins. BIT MAP. Output cover LEDs will blink output sort locations.

00C4	Sort 5 Bins 1-8	80	00 to FF	Input Sort 3 to handler output bins. BIT MAP. Output cover LEDs will blink output sort locations.
00C5	Sort 6 Bins 1-8	80	00 to FF	Input Sort 2 to handler output bins. BIT MAP. Output cover LEDs will blink output sort locations.
00C6	Sort 7 Bins 1-8	80	00 to FF	Input Sort 4 to handler output bins. BIT MAP. Output cover LEDs will blink output sort locations.
00C7	Sort 8 Bins 1-8	80	00 to FF	Input Sort 2 to handler output bins. BIT MAP. Output cover LEDs will blink output sort locations.
00C8	Reserve C8	00		Not Used At This Time.
00C9	Reserve C9	00		Not Used At This Time.
00CA	Reserve CA	00		Not Used At This Time.
00CB	Reserve CB	00		Not Used At This Time.
00CC	Reserve CC	00		Not Used At This Time.
00CD	Reserve CD	00		Not Used At This Time.
00CE	Reserve CE	00		Not Used At This Time.
00CF	Reserve CF	00		Not Used At This Time.
00D0	Reserve D0	00		Not Used At This Time.
00D1	Bit Check	00	00, FF	For PROGRAMMER RS-232 Interface only. Performs Illegal Bit Test at the start of the programming cycle. 00 = Bit Check ON. FF = Bit Check OFF.
00D2	Interface Type	26	21, 23, 25, 26, 27	Sets default interface to be used by the handler. 21 = EXATRON SUPER Interface 23 = PROGRAM RS-232 Interface 25 = EXATRON RS-232 Interface 26 = HANDLER PORT Interface 27 = LOW GOING PULSE Interface
00D3	P/V/L	02	02, 04, 08	For PROGRAMMER RS-232 Interface only. Selects Program, Verify, or Load Master operation. 02 = Program. 04 = Verify. 08 = Load Master.
00D4	Reserve D4	00		Not Used At This Time.
00D5	Reserve D5	00		Not Used At This Time.
00D6	Reserve D6	00		Not Used At This Time.
00D7	Reserve D7	00		Not Used At This Time.
00D8	2nd Start Width	00	00 to FF	Adjust the start test pulse width. This is allowed to provide flexibility in interfacing between the handler and tester/programmers. Counts down in HEX
00D9	2nd Start Delay	00		Time delay for test site solenoids to close. Counts down in HEX to determine the time delay in milliseconds
00DA				
00DB				
00DC				
00DD				
00DE				
00DF				
00E0				
00E1				
00E2				
00E3				
00E4				
00E5				
00E6				
00E7				
00E8				
00E9				
00EA				
00EB				

00EC				
00ED				
00EE				
00EF				
00F0				
00F1				
00F2				
00F3				
00F4				
00F5	Pass Word On / Off	FF	00, FF	00 = Password On, FF = Password Off.
00F6				
00F7	Cal Steps	34	(ASCII)	Set the 100's digit for number of cal steps. (ASCII)
00F8	Cal Steps	31	(ASCII)	Set the 10's digit for number of cal steps. (ASCII)
00F9	Cal Steps	30	(ASCII)	Set the 1's digit for number of cal steps. (ASCII)
00FA	Accel 100's	35	(ASCII)	Set the 100's digit for motor acceleration. (ASCII)
00FB	Accel 10's	34	(ASCII)	Set the 10's digit for motor acceleration. (ASCII)
00FC	Accel 1's	34	(ASCII)	Set the 1's digit for motor acceleration. (ASCII)
00FD	Velocity 100's	32	(ASCII)	Set the 100's digit for motor velocity. (ASCII)
00FE	Velocity 10's	30	(ASCII)	Set the 10's digit for motor velocity. (ASCII)
00FF	Velocity 10's	30	(ASCII)	Set the 1's digit for motor velocity. (ASCII)

Chapter 3 Interface Information

OVERVIEW

The test site on the Handler may be interfaced to virtually any programmer and/or tester available. Some interfaces require custom configuration prior to shipment but the only requirement for a given programmer or tester is that it be capable of issuing and accepting commands to and from the handler or the system controller. There are two basic parts to the handler's interface with your programmer/tester.

1. **The first part is the "DUT Interface."** The DUT Interface connects the handler's test contacts to the tester's test socket. There are many ways to accomplish this, depending upon application and type of changeover kit. A direct dock interface which connects the tester directly to the handler contacts provides the best performance, although other interface methods are available. In most cases, the hardware required for the DUT Interface will be built and installed at EXATRON. Therefore, the DUT Interface will not be discussed in this section of the user's guide.

2. **The second basic part to every interface is the "Control Interface."** The Control Interface allows the handler to send a Start to the tester and subsequently allows the tester to instruct the handler how to process the device under test. The handler is equipped with a variety of ways to accomplish this task using two basic means of access: a parallel port (EXATRON'S "Handler Port") and an RS-232 serial port.

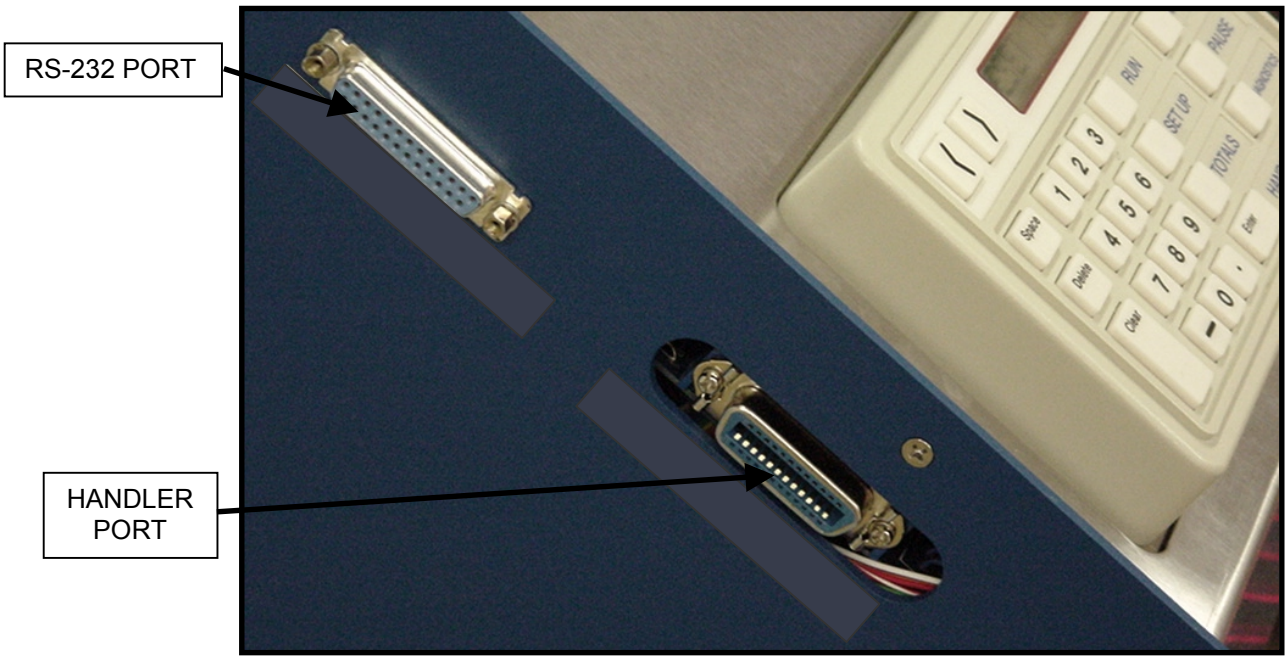

The handler has a number of operating features which relate to the handler's tester control interface. Both the Handler Port and RS-232 Port have several distinctive options from which to choose. These various control interfaces available from EXATRON are the subject of the following discussion. They have been organized into three categories:

A. General Interface Options, (common to both Handler Port and RS 232 Port)
B. Handler Port Interface Options.
C. RS-232 Interface Options.

Please read through all of the firmware options in this chapter to determine exactly which interface will meet your specific application requirements.

General Interface Options and Set Up

Accessing a Handler Control Interface:

When the handler powers up, you will be given the opportunity to, **PICK INTERFACE?** If you press the **[Enter]** button, the previously selected interface (or default interface, if RAM was cleared) will be selected. Listed below are the standard interfaces currently supplied with the handler. NOTE: New interfaces are added to the handler from time to time. Please contact EXATRON for updates as required. Our toll-free telephone number is: 1-800-EXA-TRON.

From "PICK INTERFACE?" displayed on the front panel:

PICK INTERFACE ?

[1] key chooses and displays: **HANDLER PORT**
[2] key chooses and displays: **EXATRON SUPER**
[3] key chooses and displays: **EXATRON RS-232**
[4] key chooses and displays: **PROGRAM RS-232**

(Please refer to Interface chapter of the manual for explanation of various interface options.)

[Clear] key rejects selection and returns to **PICK INTERFACE ?**
[Enter] key accepts selection.

General Interface RAM Selections:

Listed below are addresses in the handler's battery backed-up RAM which may be edited to fine tune the handler for your specific programmer/tester and sorting requirements when using either the Handler Port (parallel) or the RS-232 serial port. These addresses are not part of the standard power-up selections and **may be modified only by "Changing The RAM,"** as described in the Handler Set-Up Chapter of this manual.

Interface Type: Address 00D2

This address allows the user to set the default interface to be used by the handler. The following table lists available settings:

data setting **21**	=	EXATRON SUPER
data setting **23**	=	PROGRAM RS-232
data setting **24**	=	LASER ONLY KIT **[MODEL 5000 ONLY.]**
data setting **25**	=	EXATRON RS-232
data setting **26**	=	HANDLER PORT
data setting **27**	=	LOW GOING PULSE **[USES SPECIAL PAL A89-2LP.]**

Start Test Delay: Address 0097

For DIP devices only, this delay adds "settling" time to the DUT. The delay allows the DUT more time to come to rest in the test site before the contacts close. The delay counts down in HEX, in 1 millisecond steps.

Stop On Fail Y/N: Address 00AA

30 = Stop on Fail
FF = Run Failed Devices, No Stop

This option allows the handler to Stop on Fail, or not. The handler can either automatically cycle a failed device into an output tube or the handler can be set to stop. If set to **STOP ON FAIL YES**, then the handler will stop on a failure and allow the operator to retest the device again and again, as often as desired. This is very useful when calibrating test fixtures and programs.

Double Test Sort: Address 00BC

This address tells the handler which test sorts to double test if desired. A setting of "00" will turn off the double test for all sorts. A setting of "FF" will set the tester to double test all devices. Assuming Sort 1 is Pass and all other sorts are to be double tested, set this address to "FE." Each bit represents a tester sort.

Tester Sort Set Up: Addresses 00C0 to 00C7

ASCII INPUT	SORT	OUTPUT BINS	CURRENT SETTING
1	1	RAM ADDRESS C0	
2	2	RAM ADDRESS C1	
3	3	RAM ADDRESS C2	
4	4	RAM ADDRESS C3	
5	5	RAM ADDRESS C4	
6	6	RAM ADDRESS C5	
7	7	RAM ADDRESS C6	
8	8	RAM ADDRESS C7	
*****	=	Remote Flush	USED BY EXATRON RS-232 AND H P RS-232 ONLY
0	=	Remote Retest	USED BY EXATRON RS-232 AND H P RS-232 ONLY

The handler uses the specifications shown in the table above to assign Output Bins to tester Sorts. The "Current Setting" column is provided for the customer's reference purposes. Please enter your settings in this column.

If the handler does not receive one of the above test Sorts, the handler will pause and display the message, "**BAD TEST RESULT**." The handler will output the HEX equivalent of the actual character received by the handler to the LEDs on the handler's output shuttle cover. LED #1 is bit 01, LED #8 is bit 80. Pressing the **[Clear]** button on the handler's front panel will flush the device from the test site and restart operation. Press **[Enter]** to retest, if desired.
When the handler does receive a proper result in the form of one of the above test Sorts, the handler will open the test contacts and flash the output cover LED of the output bin selected. The handler will sort the DUT accordingly and start a new handling cycle.

Handler Binning Setup

I. Introduction:

EXATRON handlers are designed to accept as many as eight sort messages from your tester/programmer equipment. Selecting which output bins the handler will then put your devices in is accomplished by programming the handler to match physical output bins to tester sort results. The tester sort signals will come into the handler via the Parallel Port or the RS232 Port. Please refer to the Interface Information chapter of this manual for further reference on tester-handler communication.

II. Designing Bin Assignments:

A. Pass, Retest, Fail

Typically, there are three main categories of test results: devices that pass test, devices that definitely fail test, and devices that may or may not have failed. This last category is best understood as continuity errors, missed contacts, devices in test during power outages, etc. These are devices which may in fact be good devices but which need to be retested.

If the test program in use is designed to differentiate between fail and retest devices, then EXATRON recommends bin 5 as the retest bin. Assign bins 4 and/or 6 as the positive fail bins in this situation. Where no differentiation is made between fail and retest devices, then assign bin 5 for these devices.

B. Positive Binning

Positive binning is the concept of designing the bin assignments to minimize the ill effects of accidental binning errors. All EXATRON handlers have very substantial mis-binning protection built in. It is impossible to say absolutely that no mis-bins will ever occur. As a defense against accidental mis-binning, it is generally considered bad practice to carry “fail” or “retest” devices to their bins over the tops of any good device bin. It is better to accidentally drop a good device in a fail bin than to accidentally drop a failed device in a good bin.

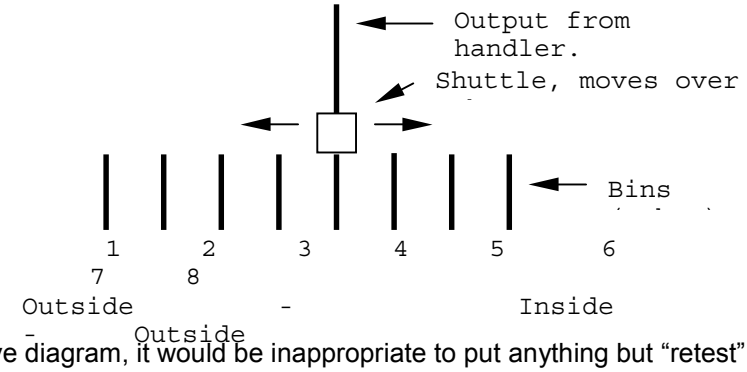

Looking at the above diagram, it would be inappropriate to put anything but “retest” or “fail” devices in bin 5. If bin 5 is assigned as a good bin, then some other bin must be assigned as a fail bin. It would then be necessary to carry a failed device across the good bin 5 to some other location. This is not recommended.

If your test results provide for grades, then the best grades should be in the outside bins, with lower grades toward the inside. If a highest-rated device is accidentally dropped in a lower-grade bin, that is not as bad a problem as if a lower grade device is dropped in a higher-grade bin.

C. Unused Sort Signals

It is wise to always assign the “retest” tube as the output for unused sort signals. This acts as a defense against “ghost” signals which may occur as a result of tester interface “noise” or power fluctuations.

III. Finding Bin Assignment Data:

To figure out the correct binning data for your desired tube outputs, please consult the “ Test Signal - Bin Sort Data Worksheet” which accompanies this document.

IV. Storing Bin Assignments in Handler Memory:

The handler uses a look-up table to assign handler output bins/tubes to tester sort signals. The output tube parameters are stored as a two digit hexadecimal number in the handler's memory (e.g.: "E5"). The first digit describes what happens with tubes numbered five through eight, and the second digit describes what happens with tubes numbered one to four. The first digit is called the "Most Significant Bit" and the second, the "Least Significant Bit."

You will need to edit the memory addresses in the handler's battery backed-up RAM to store your desired binning data. A chart with all relevant memory addresses is shown at the end of this document and on the Test Signal - Bin Sort Data Worksheet.

To edit the Handler memory from the front panel display, follow this procedure:

1.0 Make sure you have a copy of the EXATRON-supplied RAM address listing for your system. While most handlers store the binning information as described in the chart on the worksheet, some custom handlers have variations in addresses. A copy of this address listing is in the supplemental chapter at the end of this manual.

2.0 Verify that the handler is in Manual Mode. Display will read **MANUAL MODE**.

3.0 Press the **[SET UP]** key. Display will read **CHANGE RAM ? NO**.

4.0 Press the **[SET UP]** key. Display will read **CHANGE RAM ? YES**.

5.0 Press the **[Enter]** key. Display will read **LOAD DEFAULT ? NO**.

6.0 Press the **[Enter]** key. Display will read **0090 DATA 01** The handler is now in the edit mode of the handler's battery backed-up RAM.

7.0 Press the **[SET UP]** key to increment the address. The **[TOTALS]** key will decrement the address.

8.0 Press the **[SET UP]** key until address **00C0** is displayed. Display will read **0C0 DATA xx**, where **xx** is the hexadecimal data at that address. Address **00C0** is the address where data for Sort Signal 1 is stored on standard handlers. Note that LEDs on the output door are now flashing. The flashing lights indicate which tubes are currently selected for Sort 1. If you change the data, the flashing lights will change as well. Use this visual confirmation for the tubes you have selected.

9.0 If necessary, change the data at this address:

- **9.1** Press the **[Space]** key to increment the first data digit (the most significant data bit.)
- **9.2** Press the **[Delete]** key to increment the second data digit (the least significant data bit.)
- **9.3** Press the " **[0]** " key to set the data at that address to 00.
- **9.4** Press the " **[–]** " key to set the data at that address to FF.
- **9.5** Press the **[Clear]** key to load the EPROM default data at that address.

10.0 When finished editing this address, press the **[SET UP]** key until the next relevant address is shown. Consult the handler memory address chart below.

11.0 Edit this address as described above in section 9.0.

12.0 Continue this process until all addresses have been changed to proper data. Note that if your tester/programmer uses less than eight signal outputs, you should assign the fail bin to all remaining sort signals.

13.0 When finished editing, press the **[Enter]** key to exit editing and set the new DATA into RAM.

Memory addresses in handler memory for output binning data:

Sort #	Address
1	00C0
2	00C1
3	00C2
4	00C3
5	00C4
6	00C5
7	00C6
8	00C7

Test Signal - Bin Sort Data Worksheet

Instructions:

1. Write the number of the sort signal you are working on under “Sort Signal #”.
2. Write a “1” under each tube you wish to use for that signal.
3. Write a “0” under each tube you are not using.
4. Compare the pattern with the chart on the left of the page.
5. Enter the Data result under each pattern.
6. Put that data result in the handler memory at the address shown for that sort number.

Note: Tube #s are written in DESCENDING order below; they appear in ascending order on the face of the handler output door.

This example shows how to derive binning data. Using bins 1, 3, 7 & 8, the binning data is C5. Consult handler chart (bottom) for proper address.

Sort Signal	8	7	6	5	4	3	2	1
Patterns	1	1	0	0	0	1	0	1
Hex Data Numeral		C				5		
Sort Signal	8	7	6	5	4	3	2	1
Patterns								
Hex Data Numeral								
Sort Signal	8	7	6	5	4	3	2	1
Patterns								
Hex Data Numeral								
Sort Signal	8	7	6	5	4	3	2	1
Patterns								

COMPARE

Compare the pattern from the worksheet with this chart to determine hex data:

Pattern	Data
0000	0
0001	1
0010	2
0011	3
0100	4
0101	5
0110	6
0111	7
1000	8
1001	9
1010	A
1011	B
1100	C
1101	D
1110	E
1111	F

WRITE IN

Memory addresses in handler memory for sort binning data:

Sort #	Addr.
1	00C0
2	00C1
3	00C2
4	00C3
5	00C4
6	00C5
7	00C6
8	00C7

Sort Signal	8 7 6 5	4 3 2 1
Patterns	___ ___ ___ ___	___ ___ ___
Hex Data Numeral	_____	_____
Sort Signal	8 7 6 5	4 3 2 1
Patterns	___ ___ ___ ___	___ ___ ___
Hex Data Numeral	_____	_____
Sort Signal	8 7 6 5	4 3 2 1
Patterns	___ ___ ___ ___	___ ___ ___
Hex Data Numeral	_____	_____
Sort Signal	8 7 6 5	4 3 2 1
Patterns	___ ___ ___ ___	___ ___ ___
Hex Data Numeral	_____	_____
Sort Signal	8 7 6 5	4 3 2 1
Patterns	___ ___ ___ ___	___ ___ ___

Handler Port Interface

THE HANDLER PORT INTERFACE USES SIMPLE TTL-COMPATIBLE SIGNALS TO CONTROL THE HANDLER. This parallel port interface utilizes the 24 pin "D" connector on the side of the handler. It has been designed to be compatible with "MCT-type" tester control interfaces.

The HANDLER PORT interface uses the addresses 00C0 through 00C7 for tester sort to output bin and address 00BC for double test on/off selection. Please refer to the General Interface RAM Selections section at the beginning of this chapter for further details.

Handler Port Pin Out:

Sort Input 1	**Pin 1**	**Pin 13**	Input 9, End of Test✷
Sort Input 2	**Pin 2**	**Pin 14**	Not Used
Sort Input 3	**Pin 3**	**Pin 15**	Not Used
Sort Input 4	**Pin 4**	**Pin 16**	Not Used
Sort Input 5	**Pin 5**	**Pin 17**	Output 8
Sort Input 6	**Pin 6**	**Pin 18**	Output 7
Sort Input 7	**Pin 7**	**Pin 19**	Output 6
Sort Input 8	**Pin 8**	**Pin 20**	Output 5
2nd Start	**Pin 9**	**Pin 22**	Output 4
Output 1, Start Test: Pulse	**Pin 10**	**Pin 22**	Output 2, Start Test: Level
Handler Vcc, +5 VDC	**Pin 11**	**Pin 23**	Handler Vcc, +5 VDC
Handler Ground	**Pin 12**	**Pin 24**	Handler Ground

✷SPECIAL PAL REQUIRED

FIGURE 3-1A
HANDLER INTERFACE PORTS DETAIL
OPTIONAL OPTO ISOLATION PORT
SEE 5000-D76 FOR DETAILS
MATING CONNECTOR T&B #609-2030

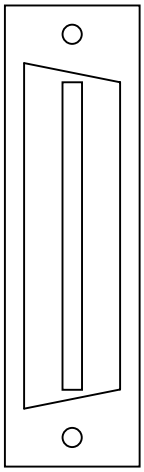

Sort 1	1	13	Not Used
Sort 2	2	14	Not Used
Sort 3	3	15	Not Used
Sort 4	4	16	Not Used
Sort 5	5	17	Output 8
Sort 6	6	18	Output 7
Sort 7	7	19	Output 6
EOT	8	20	Output 5
2nd Start	9	21	Output 4
Start Test Pulse	10	22	Start Test Level
Handler Vcc +5VDC	11	23	Handler Vcc+5VDC
Tester Ground	12	24	Tester Ground

NOTE: NEVER CONNECT OPTO GROUND TO HANDLER GROUND OR OPTO Vcc TO HANDLER Vcc

FIGURE 3-1B
HANDLER INTERFACE PORTS DETAIL
HANDLER PORT SEE 5000-A89 FOR DETAILS

MATING CONNECTOR CINCH #57-30240

Sort 1	1	13	Input 9 EOT
Sort 2	2	14	Not Used
Sort 3	3	15	Not Used
Sort 4	4	16	Not Used
Sort 5	5	17	Output 8
Sort 6	6	18	Output 7
Sort 7	7	19	Output 6
Sort 8	8	20	Output 5
2nd Start	9	21	Output 4
Start Test Pulse	10	22	Start Test Level
HandlerVcc +5VDC	11	23	HandlerVcc +5VDC
Handler Ground	12	24	Handler Ground

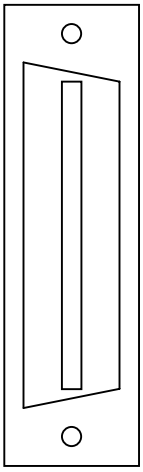

NOTE: NEVER CONNECT TESTER Vcc TO HANDLER Vcc

REMEMBER:

1. Use the 24-pin handler port.

2. All signals are TTL/CMOS compatible.

3. Opto-isolation is available as an optional feature <u>except</u> on the 2000B Series Handlers. To obtain this feature for your Model 3000B or Model 5000 Handler, please specify your request at the time of placing your handler order.

   Additionally, all 3000B and 5000 Series Handlers may be upgraded to opto-isolation in the field. To order this upgrade for an existing handler, contact the EXATRON Sales Department and order PCB #5000-D76, "Opto Isolation Interface/Light Pole Option PCB." Our toll-free telephone number is 1-800-EXA-TRON.

4. The +5 volt output on the handler port (Pins 11, 23) is **NOT** to be used by or connected to the tester, unless it is isolated at the tester.

5. Pins 12 and 24 are ground connections.

6. Refer to FIGURE 3-2 following, for timing diagram.
   For further timing/sort details, please refer to DRAWING #5000-F62.

FIGURE 3-2
HANDLER PORT INTERFACE Timing Detail

The handler first moves a device into the test site. After allowing time for the device to settle, (NOTE: this settling time is programmable; use address 0097) the test head plunger picks up the device and plunges it down toward the contactors. Then the handler issues a start pulse (Pin 10) to the tester. The start pulse width is programmable, (address 0098) but will be pre-set to 20 milliseconds. This pulse is normally High (+5) and goes Low for the pulse width. There is an additional signal available on Pin 22. This testing signal will go Low for the duration of the test. It will go Low at the start of the start pulse and will not go High again until the handler receives a sort signal.

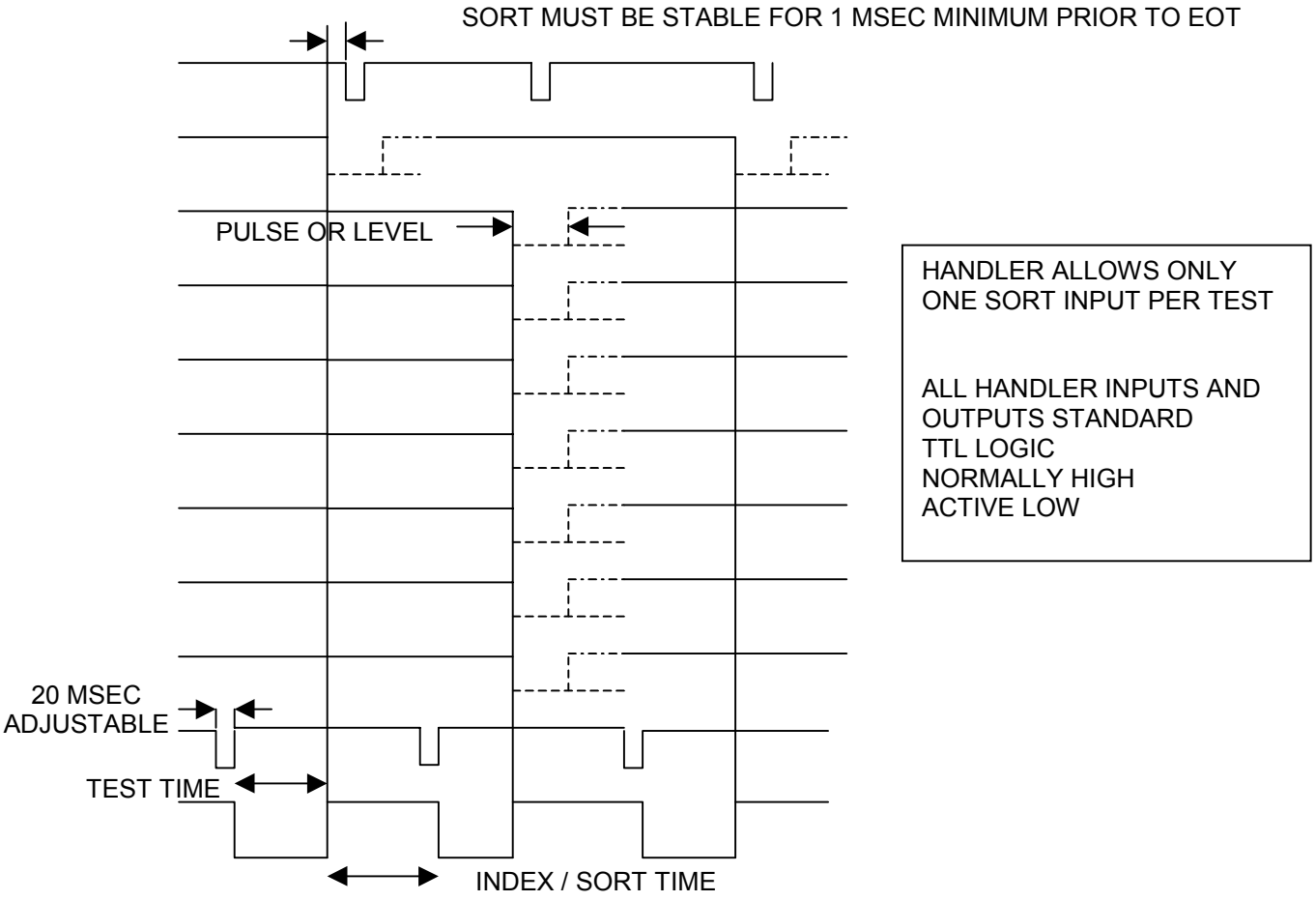

To complete the test, the tester must send back one of eight sort signals. These signals must be normally High and go Low for at least two milliseconds. The sorts must appear on Pin 1 through Pin 8 on the handler port connector. We recommend that you use Pin 1 for PASS and Pin 2 for FAIL when using the handler in PASS/FAIL applications.

The Input Sort is connected to a PAL device which "latches" the signal. The latch sets the falling edge of the sort signal ON. Make certain that your interface does not allow fast "glitches" which may become latched, causing the handler to mis-sort. If desired, the PAL may be modified to one that requires an "End of Test" edge as well. Further details are provided in the Handler Port Options section later in this chapter.

To abort the test, press the **[Clear]** button on the handler controller. This will sort the DUT to the Home bin, output tube 5.

Once the handler receives a sort pulse, it checks that:

1. The sort has a corresponding output. If not, you will see:
   NO SORT ERROR displayed, advising that there are no outputs available.

2. Only one sort has been received. Only one sort signal is allowed. If multiple sorts were received, you will see: **MULTI SORT ERR** displayed. The output shuttle cover LEDs will blink the pattern of the actual sorts latched by the handler. Two or more LEDs will blink, indicating the multiple sort error.

If the received sort pulse is acceptable, the contacts will open and the device will be sorted to an output tube. Or, in the case of plunge-to-board changeover kits, the test site plunger will pick up the device and rise to its highest point. From there, the device will be sorted to an output tube.

Handler Port Options:

EOT (END OF TEST)

The handler port is controlled by two PAL devices. These PALs control the polarity of the handler's input/output signals and whether "EOT" is to be used or not. The EOT input (pin 13) is not active unless the correct PAL is installed on the handler's Front Panel Card #5000-A89. The EOT signal, when used, will cause the handler to ignore all tester sort input signals until the EOT (normally High, active Low) is received by the handler.

PAL 101-12.JED (Sum check 76B0) = No EOT signal required.
PAL 101-12EOT.JED (Sum check 75B0) = EOT signal required by the handler.

CORRECT PALS MAY ALWAYS BE OBTAINED FROM EXATRON AT NO CHARGE.

Listed below are addresses in the handler's battery backed-up RAM which may be edited to fine-tune the handler for your specific programmer/tester and sorting requirements. These addresses are not part of the standard power-up selections and **may be modified only by "Changing The RAM,"** as described in the Handler Set-Up Chapter of this manual.

START PULSE WIDTH: ADDRESS 0098

This delay controls the Start of Test pulse width. The delay counts down in HEX, in 1 millisecond steps. The standard default is "14." This sets the start test pulse width to 20 milliseconds. On interfaces using a PC to control the handler, a longer start pulse width may be required to guarantee that the PC sees the start test pulse from the handler.

CHECK SORT RESET: ADDRESS 00A6

00 = On
FF = Off

The Check Sort Reset feature should always be used on handlers which are employing the Handler Port interface. This check verifies that all Sort signals to the handler are turned off at the end of the Start pulse (all Sorts are at Logic High.)

Occasions may arise during operation of the Handler Port interface when the handler sends a Start pulse to the tester but the tester either does not see the Start signal, or the tester fails to clear the previous Sort signal. In the latter case, the previous Tester Sort signal is still active at the end of the Handler's current Start pulse. The handler correctly responds to the previous Sort signal, which means that the current device under test (DUT) will not be tested and will be mis-sorted. It may appear to the operator that the handler is making an error, when in fact the tester has made an error. Therefore, it is a good idea to set this check to On whenever your application allows for it.

SECOND START PULSE FEATURE
2ND START WIDTH: ADDRESS 00D8
2ND START DELAY: ADDRESS 00D9

Exatron has added a "2ND START PULSE" to the EXATRON Handler Port interface. This second start pulse is to be used in the event that the tester you wish to use has a problem with the handler's standard start pulse timing. Use this "2ND START PULSE" only to solve interface problems flagged by the error messages: **SORT NOT RESET** and/or **MULTI SORT ERROR**.

- For correct use of the handler's standard start pulse, the tester must reset all sort signals to Logic High on the leading/falling edge of the standard start pulse. The handler resets its input sort latch on the rising edge of the start pulse. At that instant in time, if any sort signals are still present from the tester, they will be latched into the handler's sort latch. This could cause the handler to sort an untested device to an output bin based on the previous tester bin result. In many cases, the mechanical motion of the handler will allow both the previous bin result plus the new bin result to be latched into the handler's sort latch. This will result in a **MULTI SORT ERROR** message. The handler's output cover LEDs will flash the input error combination. Typically, a Pass and a Fail input will flash at the same time.

- It may be that your tester does not respond to either edge of the handler's start pulse. This is a common problem with PC-based testers. In this case, making the standard start pulse longer may correct the problem.

- It may be that your tester resets the sorts on the rising edge of the handler's standard start pulse. In this case, making the standard start pulse longer will have no effect. You now have the option to use the "2ND START PULSE." You may, from the handler's front panel, adjust the second start pulse to start before the standard start pulse, and/or end after the standard start pulse. You may now use the rising edge of the second start to reset the tester, independent of the rising edge of the standard start. Care must be taken to be absolutely sure that the tester's sorts are completely reset before the end of the start pulse used by the tester.

Please refer to FIGURE 3-3 on the following page for timing diagrams of several "2ND START" set up examples. If you are having interface problems, please call the EXATRON factory for free customer service advice. Our toll-free telephone number is: 1-800-EXA-TRON. EXATRON cannot be held responsible for mis-sorted devices when the tester's sort signal timing is not correctly set up and fully understood by the customer.

FIGURE 3-3

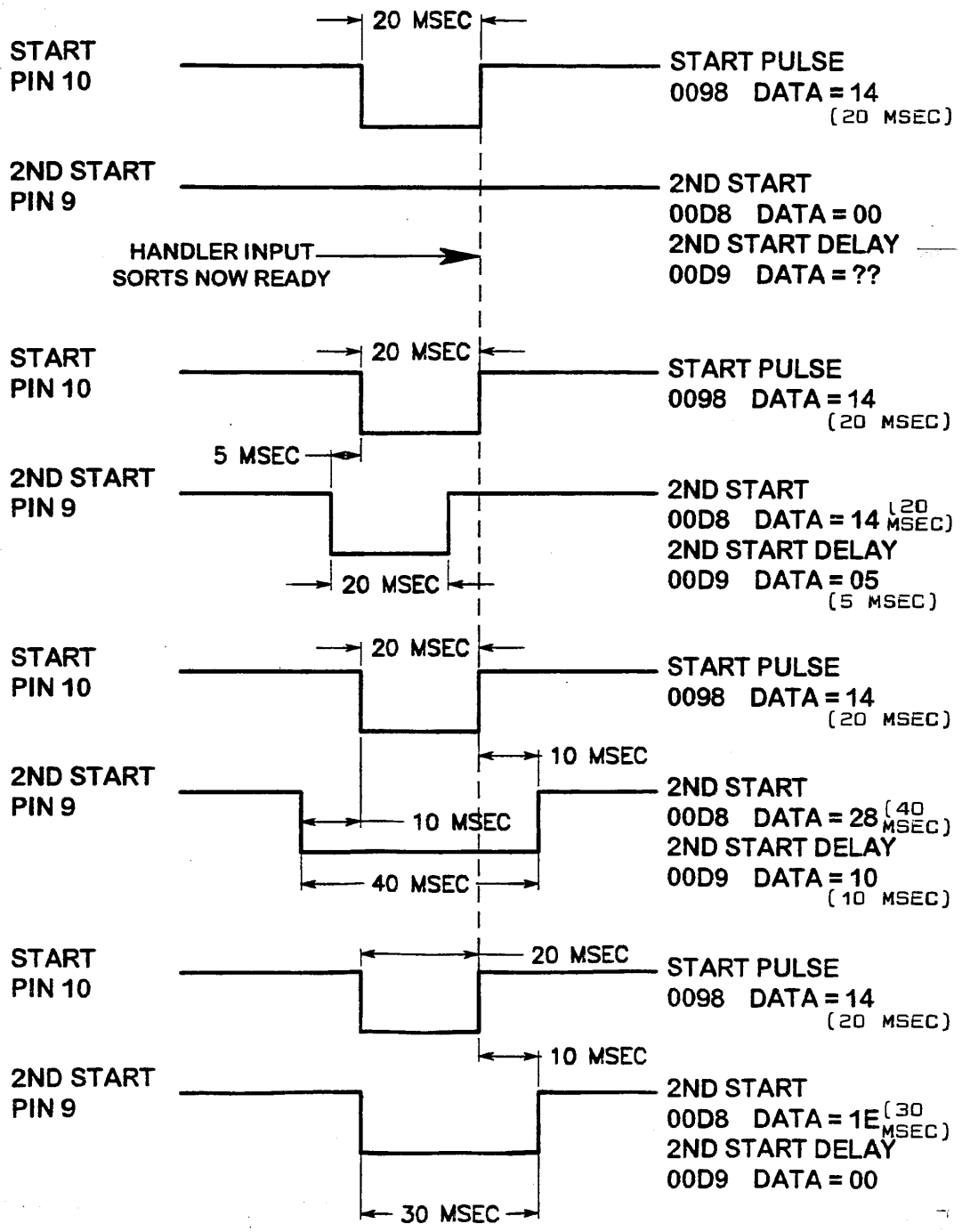
20 MSEC
START
PIN 10
START PULSE
0098 DATA = 14
(20 MSEC)
2ND START
PIN 9
2ND START
00D8 DATA = 00
2ND START DELAY
00D9 DATA = ??
HANDLER INPUT
SORTS NOW READY
START
PIN 10
20 MSEC
START PULSE
0098 DATA = 14
(20 MSEC)
5 MSEC
2ND START
PIN 9
2ND START
00D8 DATA = 14 (20 MSEC)
2ND START DELAY
00D9 DATA = 05
(5 MSEC)
20 MSEC
START
PIN 10
20 MSEC
START PULSE
0098 DATA = 14
(20 MSEC)
10 MSEC
2ND START
PIN 9
10 MSEC
2ND START
00D8 DATA = 28 (40 MSEC)
2ND START DELAY
00D9 DATA = 10
(10 MSEC)
40 MSEC
START
PIN 10
20 MSEC
START PULSE
0098 DATA = 14
(20 MSEC)
10 MSEC
2ND START
PIN 9
2ND START
00D8 DATA = 1E (30 MSEC)
2ND START DELAY
00D9 DATA = 00
30 MSEC

RS-232 Interfaces

EXATRON SUPER ~ EXATRON RS-232 ~ H P RS-232 ~ PROGRAMMER RS-232

RS-232 Port Options:

Listed below are addresses in the handler's battery backed-up RAM which may be edited to fine tune the handler for your specific programmer/tester and sorting requirements. These addresses are not part of the standard power-up selections and **may be modified only by "Changing The RAM,"** as described in the Handler Set-Up Chapter of this manual.

BAUD RATE

009A	**__**	This address stores the baud rate setting for the RS-232 serial port. The RS-232 port uses the 25 pin RS-232 connector on the side of the handler.
009A	**06**	19200 Baud
009A	**0C**	**9600 Baud [Default setting]**
009A	**18**	4800 Baud
009A	**30**	2400 Baud
009A	**60**	1200 Baud
009A	**C0**	600 Baud
009A	**80**	300 Baud

DATA FORMAT

009B	**__**	This address stores the data format setting for the RS-232 port.		
009B	**02**	No parity	7 Data	1 Stop
009B	**2A**	Stick one	7 Data	1 Stop
009B	**3A**	Stick zero	7 Data	1 Stop
009B	**1A**	Even parity	7 Data	1 Stop
009B	**0A**	Odd parity	7 Data	1 Stop
009B	**06**	No parity	7 Data	2 Stop
009B	**2E**	Stick one	7 Data	2 Stop
009B	**3E**	Stick zero	7 Data	2 Stop
009B	**1E**	Even parity	7 Data	2 Stop
009B	**0E**	Odd parity	7 Data	2 Stop
009B	**03**	**No parity**	**8 Data**	**1 Stop [Default setting]**
009B	**2B**	Stick one	8 Data	1 Stop
009B	**3B**	Stick zero	8 Data	1 Stop
009B	**1B**	Even parity	8 Data	1 Stop
009B	**0B**	Odd parity	8 Data	1 Stop
009B	**07**	No parity	8 Data	2 Stop
009B	**2F**	Stick one	8 Data	2 Stop
009B	**3F**	Stick zero	8 Data	2 Stop
009B	**1F**	Even parity	8 Data	2 Stop
009B	**0F**	Odd parity	8 Data	2 Stop

Exatron Super

The Exatron Super interface allows for computer control of the handler, tester/programmer, and label/laser marker as a complete system. This interface uses the handler's RS-232 Control Port to communicate with the controlling computer running Exatron E5000 laser software or Exatron Label Maker software. The actual connection to the computer is usually COM1, COM3, or the first port on the Digiboard I/O box. This may vary depending upon your handler's configuration.

All aspects of production are controlled by the computer carrying out instructions as they are defined in a file called a "Job." Job files may be created, edited and saved as desired by the operator.

All serial connections are 25 pin to 25 pin "straight through." If a special cable is needed for your programmer/tester, please provide Exatron with the pin out configuration or the cable itself, so that we may furnish compatible interface hardware.

The communications settings are fixed in the firmware at **9600 Baud, No Parity, 8 Data Bits, 1 Stop**. All serial devices connected to the Exatron controlling computer should be so configured.

The connector on the handler is a 25 pin RS-232-type "D" connector with female pins. The mating connector on the interface cable must use male pins. The RS-232 side panel port uses the following pins:

Pin **1** = **GROUND**
Pin **2** = **RECEIVE;** input to handler
Pin **3** = **SEND;** output from handler
Pin **7** = **GROUND**

Typically this cable is wired one to one (1 : 1) to the RS-232 port on the back of a PC using a 25 pin RS-232 connector. If your PC uses a 9 pin RS-232 port, then, typically use a straight through interface cable.

REMOTE GO: ADDRESS 0099

00 = On
FF = Off

This address must be set to On for the controlling computer to have access to the handler's RAM. If this address is not set properly, the handler will display the message: **WAITING FOR PC**.

EXATRON SUPER RS-232 CONTROL COMMANDS: [5000 SERIES ONLY.]

This information is subject to change without notice. Contact EXATRON for latest revision. The following RS-232 control commands are used by the EXATRON 5000 Series Handlers. The handler must be set to use the EXATRON Super interface only. These commands do not apply to the handler's Programmer RS-232 interface, or EXATRON RS-232 interface, or to any other RS-232 interface.

For firmware: "5000FAST"

TEST [CR]

The handler has loaded a device into the test site. (The top test site in dual site handlers.) The tester should now start testing the DUT for the first time. No answer is required. Do not send the End Of Test (EOT) sort until the handler specifically asks for **END TEST [CR]**.

END TEST [CR]

Requests the End Of Test (EOT) sort for the DUT in the test site.
The handler must receive an answer before continuing operation. Send back a single ASCII character. The only legal answers are the numbers 1 through 8.

Example: for Sort 1, PASS, send a "**1**"
for Sort 2, FAIL, send a "**2**"

RETEST [CR]

The handler has unloaded a device from the contacts and has reinserted it for a double test operation. (The top test site in dual site handlers.) The tester should now begin testing the same DUT for the second (or multiple) time. No answer is required. Do not send the EOT sort until the handler specifically asks for **END RETEST [CR]**.

END RETEST [CR]

Requests the End Of Test (EOT) sort for the DUT(s) in the test site. The handler must receive an answer before continuing operation. Send back a single ASCII character. The only legal answers are the numbers 1 through 8.

Example: for Sort 1, PASS, send a "**1**"
for Sort 2, FAIL, send a "**2**"

ERROR [CR]

The handler has received a command, but the command was not understood or is not one of the legal commands used by the handler. No answer is required, but if you want the handler to perform some operation, then retry your previous command.

COMMANDS FROM THE PC TO THE HANDLER:

1 [CR] = SORT 1
2 [CR] = SORT 2
3 [CR] = SORT 3
4 [CR] = SORT 4
5 [CR] = SORT 5
6 [CR] = SORT 6
7 [CR] = SORT 7
8 [CR] = SORT 8

+ (plus) = Put handler in Listen mode.

+ A90 [CR] = Ask handler to send a specific EPROM/RAM address setting:
"**?? ROM ?? RAM ??**"

+ B [CR] = Reset all handler tube/total counters to zero.
Handler display will read, **TOTALS SET TO 0**.

+ C90 FF [CR] = Accept new RAM settings from PC.

+	= plus
C	= "C" command
90	= address
	= space
FF	= new data for address location
[CR]	= end of string

+ D [CR] = Loads handler EPROM default settings into the handler's RAM address, from 0090-00FF to E390-E3FF.
Handler display will read: **LOAD EPROM > RAM**.

+ E [CR] = Send EPROM/RAM address "labels"
+ F [CR] = Send RAM data from handler to PC. Handler returns a long string of 8 bit characters, one character for each address location from E390 to E3FF, ending with a [CR].

+ G [CR] = Go; Index a new DUT, start running operations.

+ I [CR] = Handler returns EPROM default settings addresses 0090 - 00FF.

+ P [CR] = Pause the handler. Press the handler **RUN** button to restart operation.

+ T [CR] = Send RAM data from PC to handler RAM E390 - E3FF.

REMOTE RAM COMMANDS:

"A" command = Request ROM/RAM address setting.

To check a single address setting in both the handler's ROM and RAM, send "**A90 [CR]"**. **A** for address, **90** to **FF** for a given address.

The handler will send back:
90 ROM 01 RAM 01 [CR]

This displays the current address location selected, the ROM default setting, and the current RAM setting.

"P" command = Pause Handler

First, send a **+** (plus) to the handler; wait for the handler to return a **+** (plus.) The handler is now ready to receive a command.

Send **"P [CR]"** to the handler. The handler will complete its current sub-cycle and will PAUSE the handler as soon as possible. The display will read: **HANDLER PAUSED.**

To restart the handler, press the **RUN** button on the handler's control panel.

Exatron RS-232:

The Exatron RS-232 interface allows the handler to be interfaced to virtually any computer-based piece of test equipment. The user must write a program which communicates with the handler using the commands listed in this section. This interface is unlike EXATRON'S other control interfaces.

The connector on the handler is a 25 pin RS-232-type "D" connector with female pins. The mating connector on the interface cable must use male pins. The RS-232 side panel port uses the following pins:

Pin **1** = **GROUND**
Pin **2** = **RECEIVE;** input to handler
Pin **3** = **SEND;** output from handler
Pin **7** = **GROUND**

The baud rate, stop bits, data bits, and parity may be selected by setting an address (RAM address 009B = baud rate, 009C = data format) in the handler's EPROM. Please refer to the General Interface Firmware Address section at the beginning of this chapter for Baud Rate and Data Format settings. The standard EXATRON RS-232 settings are: **9600 Baud, No Parity, 8 Data Bits, 1 Stop**.

BASIC HANDLER/CPU TEST CYCLE HANDSHAKE

Summary:

[EXATRON uses only standard upper case ASCII characters.]

1. HANDLER SENDS AN "H [CR]."
2. TESTER SENDS AN "R," READY.
3. HANDLER CLOSES TEST CONTACTS ONTO THE DEVICE UNDER TEST ("DUT.")
4. HANDLER SENDS AN "S [CR]," START TEST (FIRST TEST CYCLE.)
5. TESTER SENDS TEST SORT RESULT, "1" THROUGH "8" OR "0" FOR REMOTE RETEST.
6. HANDLER OPENS TEST CONTACTS.
7. DUT CYCLES TO AN OUTPUT TUBE; A NEW CYCLE STARTS.

SPECIAL NOTE: **REMOTE FLUSH ~** The tester can send an asterisk, **"*,"** (**"2A"** in HEX) as a handler reset command. If the handler receives an asterisk, the test will be aborted and the device will be flushed to the Home bin, output tube 5.

SPECIAL NOTE: **REMOTE RETEST ~** You may send a zero, **"0,"** to the handler as a test result. This will cause the handler to pick up the device and replunge/retest it. A new **"S"** will be sent to the tester. You may use the **"0"** response as many times as you wish. To end a test cycle, send the handler a **"1"** through **"8"** as a sort command.

BASIC HANDLER/CPU TEST CYCLE HANDSHAKE

With Explanation:

1. HANDLER SENDS AN "H [CR]."

The handler establishes proper communications at the outset of every cycle (except Retest cycles.) To do so, an **"H"** and a carriage return, **"[CR],"** are sent by the handler to the tester at the start of each test cycle. The handler is seeking an **"R,"** Ready, from the tester. The display will read: **WAITING FOR R.**

2. TESTER SENDS AN "R," READY.

3. HANDLER CLOSES TEST CONTACTS ONTO THE DEVICE UNDER TEST ("DUT.")

If an **"R"** is received, the handler will close the contacts or plunge the device onto the contacts. If the handler does not receive a response, the display will briefly read: **NO RESPONSE. NO RESPONSE** will alternate with: **WAITING FOR R** once per second. Pressing the **[Enter]** button on the front panel will cause the handler to send a new **"H."**

If anything other than an **"R"** or an **"*"** is received, the handler will pause and display the message: **BAD RESPONSE.** The handler will output the HEX equivalent of the actual character received by the handler to the LEDs on the handler's output shuttle cover. LED #1 is bit 01, LED #8 is bit 80. Pressing the **[Enter]** button on the front panel will cause the handler to send a new **"H"** and the handler will try again to receive an **"R."** Pressing the **[Clear]** button on the front panel will cause the handler to flush the device from the test site and restart operation. The display will read: **BIN 5 S0 FLUSH.**

4. HANDLER SENDS AN "S [CR]," START TEST (FIRST TEST CYCLE.)

As stated above, once the handler receives an **"R,"** the test contacts will close onto the DUT. The handler will allow time for the test contacts to close. Then the handler sends an **"S [CR]"** for Start Test, to the tester. The display will read: **START 1 TEST**.

If you wish to abort the test at this point, press the **[Clear]** button. This will sort the DUT to the Home bin, output tube 5.

NOTE: If the handler receives an incorrect bin sort, the message: **BAD TEST RESULT** will be displayed. The handler display will also flash the HEX equivalent of the result received on the handler's output door LED's. You may press the **[Enter]** button to reissue a Start Test command and the handler will try a second test. You may press the **[Clear]** button to abort the test and restart operation, or send the handler an ASCII **"*"** or **"2A"** in HEX. This will automatically flush the DUT and begin a new test cycle.

5. TESTER SENDS TEST SORT RESULT, "1" THROUGH "8" OR "0" FOR REMOTE RETEST.
To complete a test, the handler must receive a test result. Please refer to the TESTER SORT SET UP: ADDRESSES C0 TO C7 table of correct test Sorts and the bins to which the handler will sort the DUTs. The handler uses the specifications shown in this table to assign Output Bins to tester Sorts. The "Current Setting" column is provided for the customer's reference purposes. Please enter your settings in this column.

Memory addresses in handler memory for output binning data:

Sort #	Address
1	00C0
2	00C1
3	00C2
4	00C3
5	00C4
6	00C5
7	00C6
8	00C7

The customer may re-assign any combination of bins to any Sort by setting the selection in the handler's RAM. Be very careful not to assign the same bin(s) to a "PASS" and "FAIL" Sort. Once a Sort/Bin setting has been determined and saved in the handler's RAM, **we highly recommend saving the settings in the handler's EPROM as default settings.** Please contact the EXATRON factory for instruction on how to save RAM changes in the handler's EPROM.

6. HANDLER OPENS TEST CONTACTS.

7. DUT CYCLES TO AN OUTPUT TUBE; A NEW CYCLE STARTS.
The following address in the handler's battery backed-up RAM may be edited to fine tune the handler for your specific programmer/tester and sorting requirements. This address is not part of the standard power-up selections and **may be modified only by "Changing The RAM,"** as described in the Handler Set-Up Chapter of this manual.

D TEST ASCII OUT: ADDRESS 00AD

This address stores the ASCII letter which the EXATRON RS-232 interface will use as an output on a double test. The factory setting is an **"S"** (**53** in HEX.) The user may wish to distinguish between a **"START 1 TEST"** and a **"START 2 TEST."** The user may set this address to **"D"** (**44** in HEX,) in which case the handler will issue an **"S"** on a First Test Cycle and a **"D"** on any Double Test Cycles.

Programmer RS-232:

This interface uses the handler's RS-232 Port. The control characters have been selected to drive various types of prom programmers equipped with CRCs (Computer Remote Control.) The exact controls used herein are not to be changed by the user. If you try to use this interface and encounter problems, please contact Exatron for assistance. Please refer to "RS-232 Port Options" at the beginning of this section for Baud Rate and Data Format settings.

The Programmer RS-232 interface is compatible with the following programmers:

BP Microsystems Models 1200 and 1400 with Advanced Feature Software
Also use: Exatron RS-232 Interface
Handler Port Interface

Data I/O Autosite E
Model 2900
Model 3900
Unisite

Exatron Peregrine

System General TurPro I
TurPro FX

The following addresses in the handler's battery backed-up RAM may be edited to fine tune the handler for your specific programmer/tester and sorting requirements. This address is not part of the standard power-up selections and **may be modified only by "Changing The RAM,"** as described in the Handler Set-Up Chapter of this manual.

BIT CHECK: ADDRESS 00D1

00 = Bit check On
FF = NO bit check, Off

This address is used by the PROGRAMMER RS-232 interface only. The user may set the handler to perform an "Illegal Bit" test at the start of the programming cycle, or not. EXATRON recommends leaving this option turned On whenever possible.

P/V/L: ADDRESS 00D3

This address is used by the PROGRAMMER RS-232 interface only. The user may select the default program/verify or load master operation in the handler.

The possible defaults are:
data = 02 = Program
data = 04 = Verify
data = 08 = Load master

Chapter 4 Handler Diagnostics

OVERVIEW

This chapter describes the operation of the handler's extensive built-in diagnostics. These Diagnostics allow every sensor, solenoid, switch, motor, and I/O Port in the handler to be individually tested. Use these checks to troubleshoot any problem the handler may have.

ENTERING DIAGNOSTICS MODE

Although no tools are required, an EXATRON LED checker, part #3000-052, (small blue plastic box) will be helpful in troubleshooting broken sensor/LED pairs and for testing the handler control port.

LED CHECKER

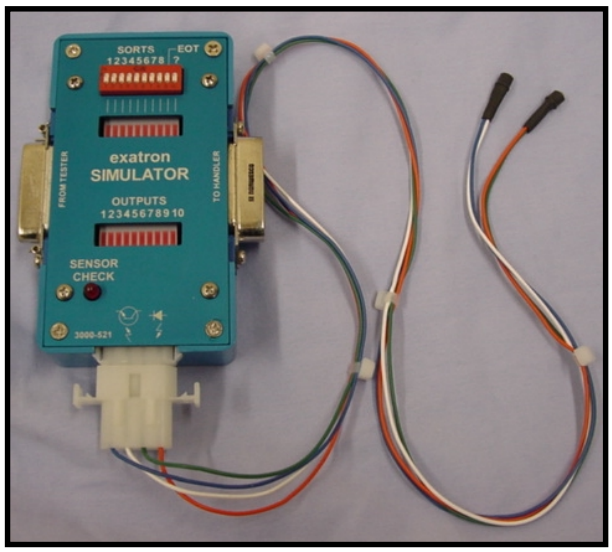

To enter Diagnostics Mode, press the **[DIAGNOSTICS]** button on the handler's controller. The display will read, **DIAGNOSTICS**. You may enter Diagnostics Mode whenever the handler powers up, is in the **READY TO RUN** Mode, or is in the **MANUAL** Mode.

MICROTERMINAL DISPLAY

Diagnostics Quick Reference

↵ This symbol means: Press the **[Enter]** button.

[DIAGNOSTICS] Enters **DIAGNOSTICS** Menu.

[1] key = **SENSOR CHECK**, then:

[1] key = **SENSORS 0-8**;, then:

SENSOR NUMBER	SENSOR NAME
0	PICKUP HEAD VACUUM
1	INDEX VACUUM A
2	INDEX VACUUM B
3	INDEX VACUUM C
4	INDEX VACUUM D
5	PICKUP HEAD BLOW OFF
6	MOTOR HOME
7	DOOR INTERLOCK
8	PLUNGE SENSOR

[2] key = **STACK ABCD** sensors.

[3] key = **TOP** of tube sensors.

Sensors 1-8 correspond to the top of each of the output tube tracks.

[4] key = **BOTTOM** of tube sensors.

Sensors 1-8 indicate if corresponding tube has parts in the tube.

↵ to return to **SENSOR CHECK**.

↵ **To return to DIAGNOSTICS Menu.**

[2] key = **OUTPUT CHECK**, then:

[1] key = **SOLENOID CHECK**. The following outputs will cause the corresponding solenoid to cycle continuously until the **[Enter]** key is pressed.

[1] Solenoid #1 Index Vac A
[2] Solenoid #2 Index Vac B
[3] Solenoid #3 Index Vac C
[4] Solenoid #4 Index Vac D
[5] Solenoid #5 Index Pin A
[6] Solenoid #6 Index Pin B
[7] Solenoid #7 Index Pin C
[8] Solenoid #8 Index Pin D
[9] All Solenoids ON
[0] All Solenoids OFF

↵ **To return to OUTPUT CHECK Menu.**

[2] key = **SOL TOGGLE CHECK**, then: The following keys will cause the corresponding solenoid to either toggle on or off. It will not continuously cycle.

[1] Solenoid #1 Index Vac A
[2] Solenoid #2 Index Vac B
[3] Solenoid #3 Index Vac C
[4] Solenoid #4 Index Vac D
[5] Solenoid #5 Index Pin A
[6] Solenoid #6 Index Pin B
[7] Solenoid #7 Index Pin C
[8] Solenoid #8 Index Pin D
[9] All Solenoids ON
[0] All Solenoids OFF

↵ **To return to OUTPUT CHECK Menu.**

[3] key = **PICK UP HEAD CHK**

[1] key = Input tube air assist.
[2] key = Pick up head vacuum.
[3] key = Drop off air assist.
[4] key = Pick up head plunge.

↵ **To return to OUTPUT CHECK Menu.**

[4] **CHK LIGHT POLE**; Optional Function. Only installed on 3000B at customer request. This routine is used to check the functionality of the light pole for those systems so equipped. The buttons act as toggle switches for the lights. As in the solenoid check, the **[0]** key will turn all the lights off, and the **[9]** key will turn them all on.

	DEFINITION OF LIGHT UNDER NORMAL OPERATION
[1] = Green light	Handler running parts normally.
[2] = Amber light	Handler is operating normally but requires operator intervention to continue. For example, a new tray of parts needs to be loaded.
[3] = Red light	Error in handler operation. Handler will pause and error message will flash on the microterminal display. Needs immediate operator intervention to resolve problem.
[9] = All lights on	For diagnostic purposes only.
[0] = All off	For diagnostic purposes only.

↵ **To return to OUTPUT CHECK Menu.**

[5] CPU PORT CHECK;

There is an eight bit input and an eight bit output TTL port on the 3000-055 CPU PCB. This port is used for some handler options. Pressing numbers **[1]** – **[8** on the microterminal turns on/off the matching bits on the output port.

↵ **To return to OUTPUT CHECK Menu.**

↵ **To return to DIAGNOSTICS Menu.**

[3] key = **INTERFACE CHECK**, then:

[1] RS-232
[2] HANDLER OUT CHECK
[3] ISSUE NEW START
[4] SERVO RS-232 CHECK

↵ sets interface option into memory and returns to **INTERFACE CHECK**.

↵ **To return to DIAGNOSTICS Menu.**

[4] key = **MOVE STEP CHECK**, then:

[1] key moves motor to top of tube 1.
[2] key moves motor to top of tube 2.
[3] key moves motor to top of tube 3.
[4] key moves motor to top of tube 4.
[5] key moves motor to top of tube 5.
[6] key moves motor to top of tube 6.
[7] key moves motor to top of tube 7.
[8] key moves motor to top of tube 8.
[9] Not Used.
[0] key halts motor. Display reads **HALT!! RESTART?** **[Enter]** key returns user to previous menu option with motor still off.
[TOTALS] key moves motor to test site.

↵ **To return to DIAGNOSTICS Menu.**

Chapter 5 Manual Mode

This chapter describes all the functions available in Manual Mode. To enter Manual Mode simply press the **[MANUAL]** key. This key may be pressed at any time. If the handler is cycling parts, pressing the **[MANUAL]** key will pause the handler and immediately enter Manual Mode.

The Display will read:
MANUAL MODE

Following is a complete outline of all the functions in Manual Mode.
The user may press **[Clear]** at anytime to cancel a selection and return to the previous step.

[TOTALS] key = **DISPLAY TOTALS** .

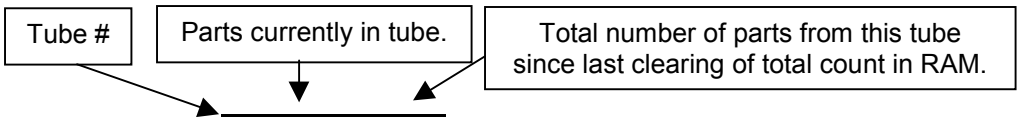

[1] Displays totals for tube 1. **T01 0000 000000**
[2] Displays totals for tube 1. **T02 0000 000000**
[3] Displays totals for tube 1. **T03 0000 000000**
[4] Displays totals for tube 1. **T04 0000 000000**
[5] Displays totals for tube 1. **T05 0000 000000**
[6] Displays totals for tube 1. **T06 0000 000000**
[7] Displays totals for tube 1. **T07 0000 000000**
[8] Displays totals for tube 1. **T08 0000 000000**
[Enter] key returns to manual mode.

[1] key = **T SITE = _ _ _ _ _**

This option sets the number of motor steps from the zero point to the test site. The factory default is 46585.

Enter changes to the Test Site step count using the controller keypad number keys. The handler allows changes to each digit from lowest to highest in order. First enter Ones, then Tens, then Hundreds, etc.

For example: to enter a step count of 54321 devices, press **[1]**, then **[2]**, then **[3]**, then **[4]**, then **[5]**. The display will read: **T SITE = 54321** .

Press the **[Clear]** key to erase your entry.
Press the **[Enter]** key to set this number into memory and proceed to the next menu option.

[2] key = **FULL TUBE = _ _ _ _**

This option sets the number of parts for a full output tube. The factory default is 0050.

Enter changes to the Full Tube count using the controller keypad number keys. The handler allows changes to each digit from lowest to highest in order. First enter Ones, then Tens, then Hundreds, etc.

For example: to enter a tube count of 4321 devices, press **[1]**, then **[2]**, then **[3]**, then **[4]** .
The display will read: **FULL TUBE = 4321** .

Press the **[Clear]** key to erase your entry.
Press the **[Enter]** key to set this number into memory and proceed to the next menu option.

[3] key = **PICK INTERFACE ?**

[1] key chooses and displays: **HANDLER PORT**
[2] key chooses and displays: **EXATRON SUPER**
[3] key chooses and displays: **EXATRON RS-232**
[4] key chooses and displays: **PROGRAM RS-232**

(Please refer to Interface chapter of the manual for explanation of various interface options.)

[Clear] key rejects selection and returns to **PICK INTERFACE ?**
[Enter] key accepts selection and proceeds to **STOP ON FAIL ?**

[4] key = **STOP ON FAIL ?**

[1] key chooses **YES**.
[2] key chooses **NO**.

[Clear] key rejects selection and returns to **STOP ON FAIL ?**
[Enter] key accepts selection and exits Setup mode.

The system is now ready to run parts.

Chapter 6 Preventive Maintenance

Overview

This chapter describes the operator's important contribution to handler productivity: keeping the Model MSOP TYPE 6 clean and smooth running. The following preventive maintenance guidelines are divided into minimum time frames. Each maintenance function should be completed at least as often as described below and more often, as needed.

NOTE: With the exception of general-use items such as isopropyl alcohol, all cleaning products and replacement parts described in this guide are available from the Sales Department at EXATRON.

Remember, there is one common-sense rule which applies to the model TYPE 6 handler as it does to all production equipment:

KEEP IT CLEAN -- it will work better and last longer.

IF YOUR HANDLER IS PERFORMING *FREQUENT* JAM-CLEARING OPERATIONS: "WIGGLING", "THUMPING", ETC., CHECK THE MECHANICAL ALIGNMENT OF THE HANDLER'S MOVING PARTS AND ADJUST AS NEEDED FOR SMOOTH FUNCTIONING.

Daily Maintenance AFTER 8 HOURS, OR MORE OFTEN AS NEEDED

1. Carefully remove all dust and debris from every surface of the handler using blasts of compressed air on front and back, from top to bottom of the handler. **Make certain that the compressed air is clean, dry and free from any oil.**

2. Verify that the handler is free of all loose tube stop pins, devices, screws, and other small objects, especially in the shuttle area.

3. Clean traditional contacts, **(non-Particle Interconnect)** including contact edges and edge connectors, by wiping with isopropyl alcohol on a clean cloth or cotton swab, *or* by using commercial contact cleaner on a cotton swab. DO NOT SPRAY CONTACT CLEANER DIRECTLY ONTO THE CONTACTS, DO NOT SPRAY OR POUR ALCOHOL DIRECTLY ONTO THE CONTACTS.

4. For Particle Interconnect **(P I)** contact cleaning and maintenance procedure, please refer to P I Section later in this chapter.

Weekly Maintenance AFTER 40 HOURS, OR MORE OFTEN AS NEEDED

1. Wipe all metal trackwork with a clean soft cloth or tissue. Or, clean the metal trackwork with cotton swabs dipped in isopropyl alcohol. **DO NOT USE STAINLESS STEEL CLEANER OR ANY OTHER CLEANER WHICH MAY LEAVE A RESIDUE ON METAL TRACKWORK.**

2. Verify that all air hoses are tight on their fittings with no air leaks.

3. Wipe down all stainless steel surfaces (non-trackwork) with CHAMPION brand Stainless Steel Cleaner (part #TLS09-125) sprayed onto a clean cloth. DO NOT SPRAY STAINLESS STEEL CLEANER DIRECTLY ONTO THE HANDLER. DO NOT USE STAINLESS STEEL CLEANER ON HANDLER TRACKWORK.

4. Clean the filter on the vacuum generator (part #VGH10F-1/4-1/4.) This filter (part #VGFE10) is white when clean, and is easily visible through the clear plastic cover over the vacuum generator.
VACUUM GENERATOR MAINTENANCE IS DISCUSSED IN GREATER DETAIL AND A CALL-OUT ILLUSTRATION IS PROVIDED IN THE "VACUUM GENERATOR MAINTENANCE GUIDELINES" SECTION LATER IN THIS CHAPTER.

DIRTY FILTER

CLEAN FILTER

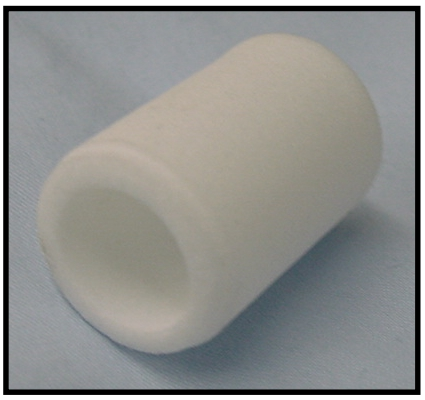

A. Disconnect the flexible plastic air tube from the swivel elbow where it attaches to the plunger assembly, by pulling the air tube straight out.

B. Loosen the vacuum generator's gray thumb screw which holds the filter chamber in place. Remove the filter and clean it with water, or better yet, replace the filter element with a new one. Replace/reinstall filter and tighten the gray thumb screw finger tight only.

Monthly Maintenance **AFTER 160 HOURS, OR MORE OFTEN AS NEEDED**

1. Check all exposed flat ribbon cables for worn insulation. Replace as necessary.

2. Check all solenoid plunger tips and their dowel pins for wear. Replace as necessary.

3. Run the full HANDLER DIAGNOSTICS sequence detailed in Chapter 5 of this manual to detect any malfunction in all switches, sensors, solenoids, motors, displays, and I/O ports.

4. Inspect the two-chamber filter on the WILKERSON Model #NC00440 air regulator (or equivalent):

AIR REGULATOR MAINTENANCE IS DISCUSSED IN GREATER DETAIL AND A CALL-OUT ILLUSTRATION IS PROVIDED IN THE "AIR REGULATOR MAINTENANCE GUIDELINES" SECTION LATER IN THIS CHAPTER.

A. Remove the charcoal filter air cleaning chamber and inspect. If the black filter element is full of particles which have been extracted from the air supply, replace this filter.

B. Remove the air drying chamber and pour out any liquid which has been extracted from the air supply.

5. Check the operation of the air regulator's orange shutoff valve:

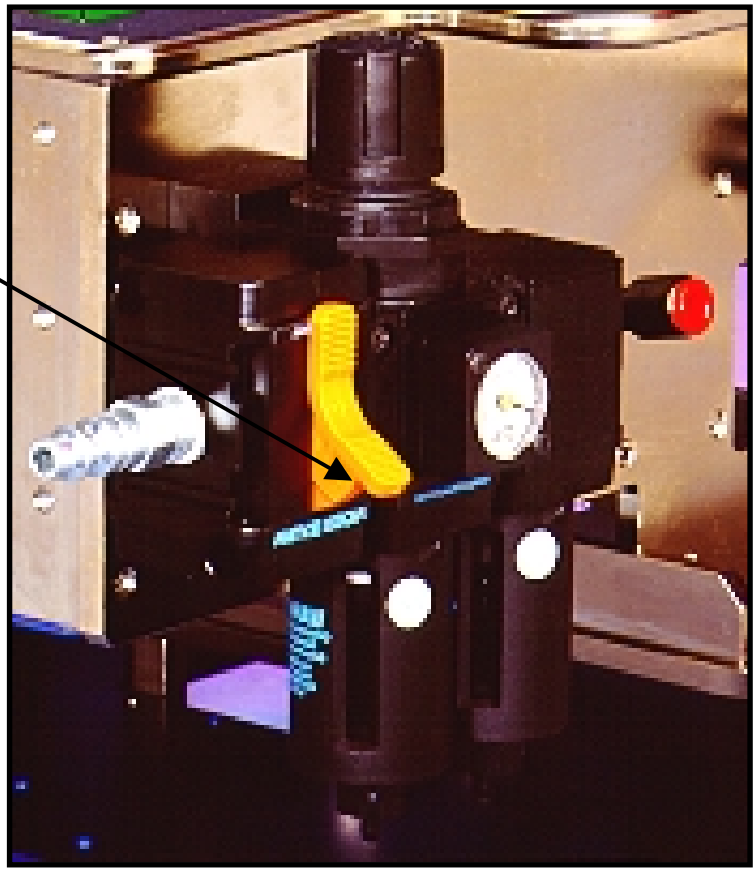

   A. Turn the valve OFF and verify that the air is indeed off.

   B. Turn the valve back ON.

6. If your TYPE 6 Handler pick-up head uses a rubber suction cup, inspect and clean the rubber suction cup inside the plunger assembly:

   A. Remove the pick-up head end piece from the fiber optic plunger.

   B. Remove the suction cup with tweezers. Clean with isopropyl alcohol. Replace if rubber is torn or shows other signs of wear.

BLUE SUCTION CUP, EXATRON PART # PART #VC-B6. USE FOR AMBIENT TEMPERATURE APPLICATIONS. GRAY SUCTION CUP, EXATRON PART # PART #VC-B6 60G SIL. USE FOR HIGH TEMPERATURE APPLICATIONS.

   C. On occasion, it is possible that a device under test (DUT) may become hot enough to melt the blue suction cup and seal it shut. If this occurs, verify that your tester is operating correctly. You may wish to switch to the gray silicon rubber suction cups for high temperature applications.

Biannual Maintenance AFTER 1000 HOURS, OR MORE OFTEN AS NEEDED

Schedule your handler to be taken out of service for one day. The entire handler should be inspected by a qualified technician. The following procedures should be implemented:

1. Clean the output solenoid of the shuttle assembly inside and out with isopropyl alcohol on cotton swabs. NEVER USE OIL OR LUBRICANT OF ANY KIND ON SOLENOIDS.

2. Check for loose and/or missing nuts and bolts which may have been caused by vibration to the handler. Replace missing parts immediately. Re-tighten any loose nuts and bolts.

3. Check stepper motor set screw tightness.

4. Check the voltage of the +5 volts and +24 volts "intelligent" power supplies built into your handler. Calibrate if necessary. The acceptable voltage ranges are +5.05 volts to +5.25 volts and +22 volts to +26 volts, respectively. Please refer to **FIGURE 7-1** for power supply mechanical details.

TO CHECK VOLTAGE:

A. Turn the handler power OFF.

B. Remove the blue side cover plate of the handler control box. This will expose the internal card cage. Locate the 3000B Front Panel PCB card. The Exatron part# is **5000-A89-C-3**. Locate the three posts on the right side of the card labeled **+24V** , **+5V** and **GROUND**.

C. Attach the positive probe of a volt meter to the **+24V** post. Attach the ground probe of the volt meter to the post marked **GROUND.**

D. Turn the handler power ON. If the voltage registers in the acceptable range, nothing further is required for the +24 volts supply. If the voltage is out of acceptable range, calibrate the +24 volts supply.

TO CALIBRATE:
CAUTION - THIS POWER SUPPLY USES HIGH VOLTAGES. ONLY QUALIFIED SERVICE TECHNICIANS SHOULD CALIBRATE THE POWER SUPPLY.

A. Remove the blue sheet metal power supply cover.

B. Locate the blue plastic potentiometer ("pot") on the front of the +24 volts power supply, the larger of the two power supplies.

C. With a small thin-bladed screwdriver, slowly turn the pot adjustment screw until the voltage reading moves into the acceptable range.

D. Turn the handler power OFF and check and/or calibrate the +5 volts supply using the same method as described above for the +24 volts supply. Substitute the post marked **"+5 V"** in place of the post marked **"+24 V"** in the instructions.

NOTE: The +5 volts power supply is smaller than the +24 volts power supply and the pot adjustment screw of the +5 volts power supply must be turned **even more slowly and carefully** than the pot of the +24 volts power supply. If the +5 volts pot is adjusted too quickly, the power supply will overload and shut down for several minutes.

To order replacement parts or receive assistance with any repair, you may call the EXATRON factory toll-free at:

[800] EXA-TRON
[800] 392-8766
Direct: [408] 629-7600

Or, feel free to fax us at [408] 629-2832 with your request. Most orders are shipped within twenty-four hours of receipt of the order.

EXATRON'S Sales Department and Customer Service Department are open from 8:00 AM to 5:00 PM, Monday through Friday.

EXATRON also offers our customers a complete Service Agreement package, providing extended service support from EXATRON factory personnel or certified independent service technicians. Call us for details!

FIGURE 7-1
EXATRON POWER SUPPLY

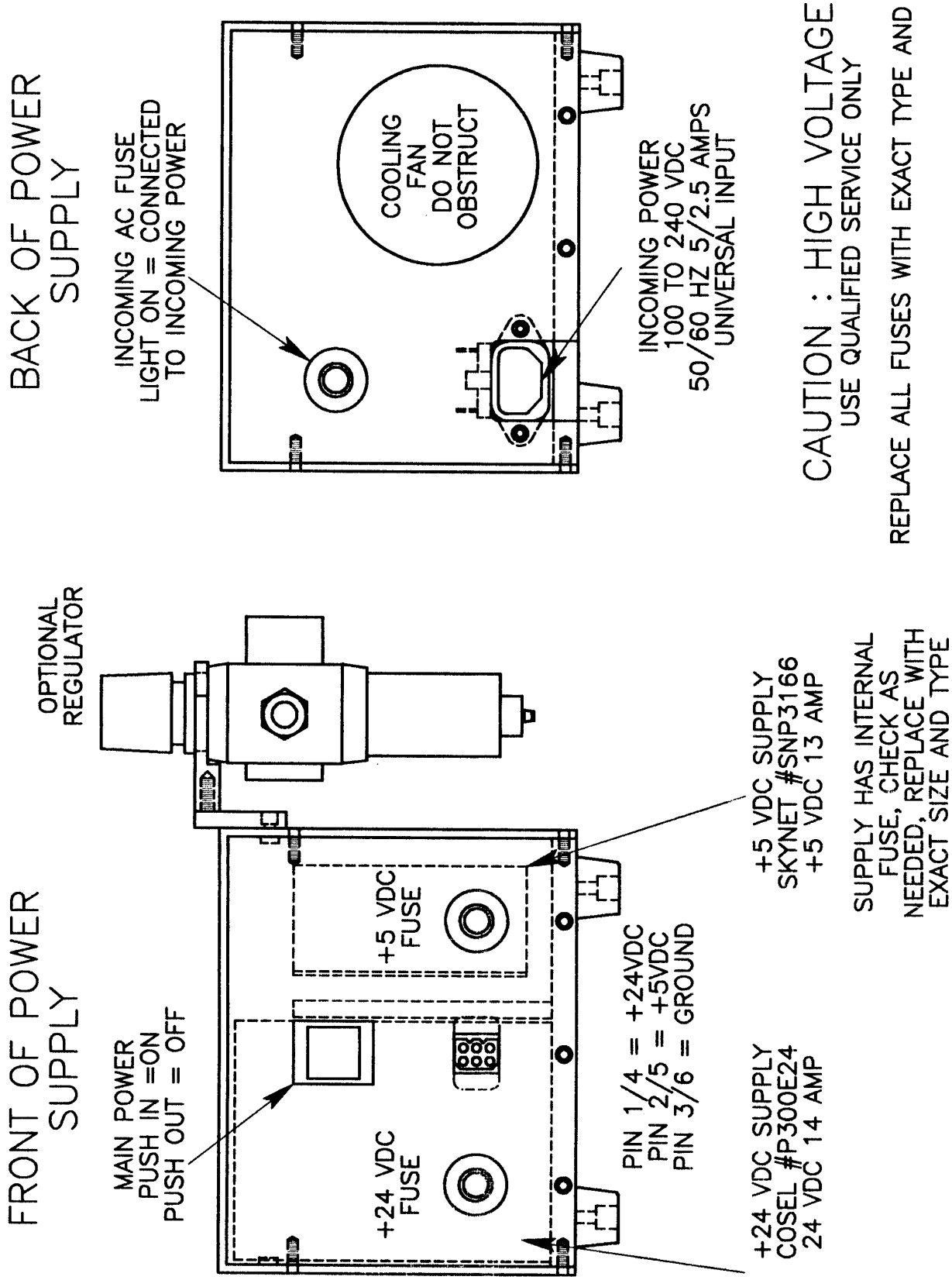

General Solenoid Maintenance Guidelines

1. Keep the solenoids as clean as possible.

2. If the handler is used with devices which have excessive mold flash, the solenoids will require cleaning regularly. The frequency is dependent upon how much mold flash gets into the solenoids.

3. NEVER use oil or lubricant of any kind on solenoids.

4. When cleaning solenoids, take care not to put excessive stress on solenoid wiring. Check all wiring for signs of wear, exposed conditions, or broken connections. Replace as needed with identical type of wire: standard or flex, same gauge, insulation, color, etc.

5. When cleaning solenoids, check the plungers to be sure there are no burrs of any kind on their shafts.

6. When mounting #SP75 or #SP62 open frame solenoids, use #40-40 screws. It is very important to not use screws which are too long and may therefore cut into the solenoid's coil. Since the handler is grounded, metal screws touching the coil would create a massive short circuit when the solenoid is turned on.

7. NEVER put a metal washer between the plunger/coil of a #SP75 or #SP62 open frame solenoid and the return spring. This will cause solenoid jams. The washer will be attracted magnetically to the body of the solenoid and will act like a brake on the solenoid plunger.

8. Wherever possible, adjust the solenoid travel/movement to be as short as possible. The solenoid power is exponentially proportional to the solenoid travel.

9. When replacing wiring on solenoids which travel, such as those on door assemblies and shuttles, always use high-flex wire. We recommend 22 AWG 150 strand high-flex wire.

10. Solenoid life is proportional to the handler environment and how often the solenoids are cleaned. We recommend that all solenoids be replaced every two million cycles as part of a good preventive maintenance program.

11. Replace any bent or damaged solenoid return springs with new parts from the EXATRON factory.

12. Refer to the hardware specifications of the Replacement Parts Chapter of this manual for the part numbers of all solenoids and springs in your handler.

13. Use the solenoid diagnostic routine for proper solenoid movement. Please refer to the Handler Diagnostics Chapter of this manual for details.

Air Regulator Maintenance Guidelines

Some EXATRON Changeover Kits use compressed air. If your kit does use compressed air, it will also require an air regulator. A high quality air regulator with coalescing air filter and shutoff valve is supplied as part of your changeover kit. **NEVER operate any EXATRON equipment which requires compressed air without an approved air regulator and shutoff valve.**

Please refer to **FIGURE 7-2** following this section for air regulator mechanical details. Additionally, please refer to the manufacturer's data sheet in Chapter 10 of this manual if necessary.

The air regulator assembly consists of:

WILKERSON AIR REGULATOR, PART #NC00-440, AND
COALESCING AIR FILTER, PART #GPA-97-075.

1. Check the operation of the orange shutoff valve once a month:
   Turn the valve OFF and verify that the air is indeed off. Turn the valve back ON.

2. Check the PSI setting:
   Some special-case changeover kits may require less than 80 PSI. However, in general, set the air regulator to 80 PSI, +/- 3 PSI.

3. Inspect the moisture trap chamber and the coalescing filter chamber. Verify that they are clean, empty and dry. There should be no oil and no water in either chamber. If they are dirty, physically disconnect the incoming air pressure supply from the air regulator and clean the trap and filter as needed.

If you find it necessary to clean the trap and/or filter more often than once a month, you should correct the problem at your in-house air compressor. Check your manufacturer's manual for the exact procedure necessary.

FIGURE 7-2
PRESSURIZED-AIR REGULATOR

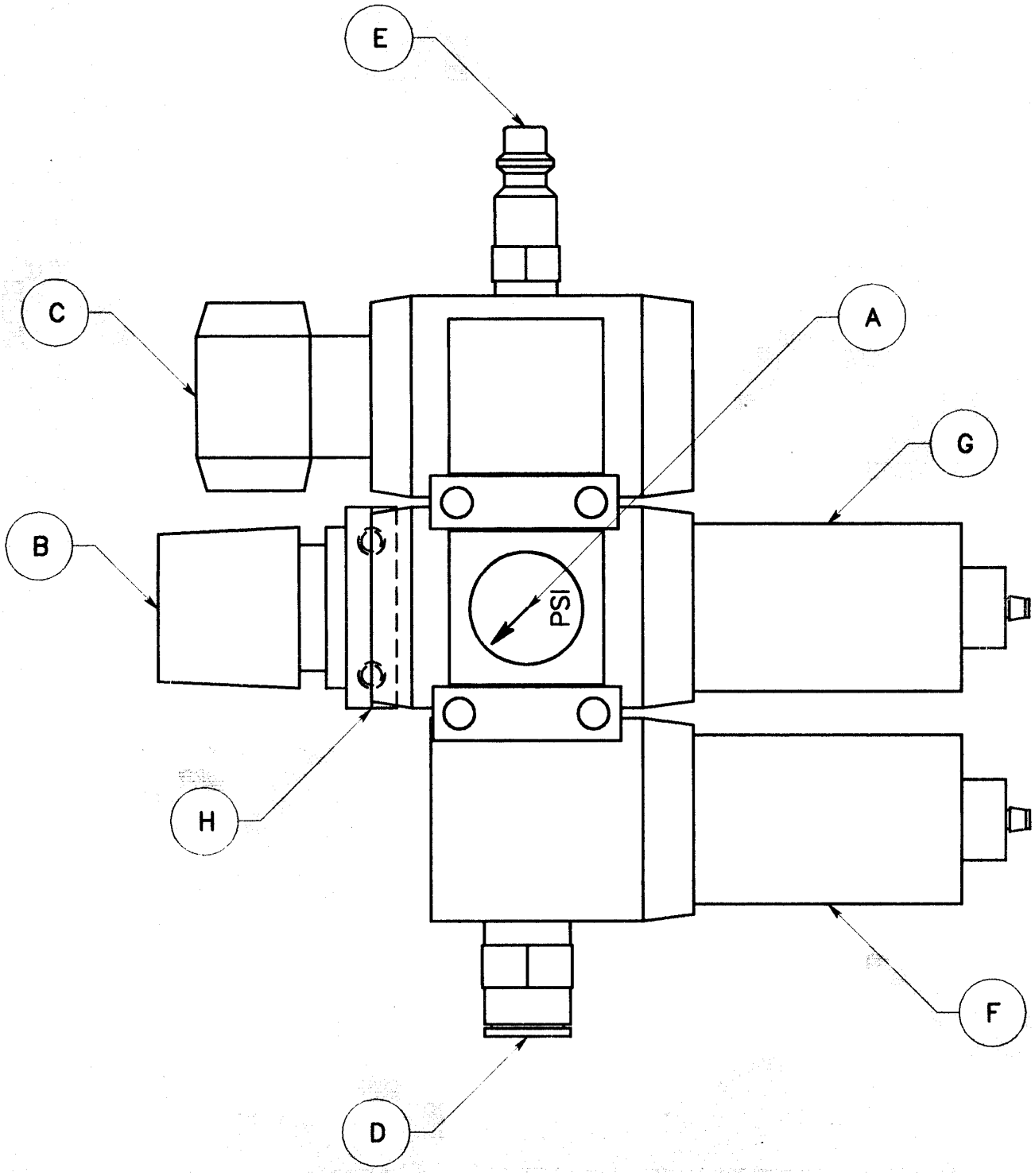

FIGURE 7-2

A. AIR PRESSURE METER.

B. AIR PRESSURE ADJUSTMENT.

C. AIR ON/OFF VALVE. *Orange in color.* Some newer versions will have the orange switch as shown below.

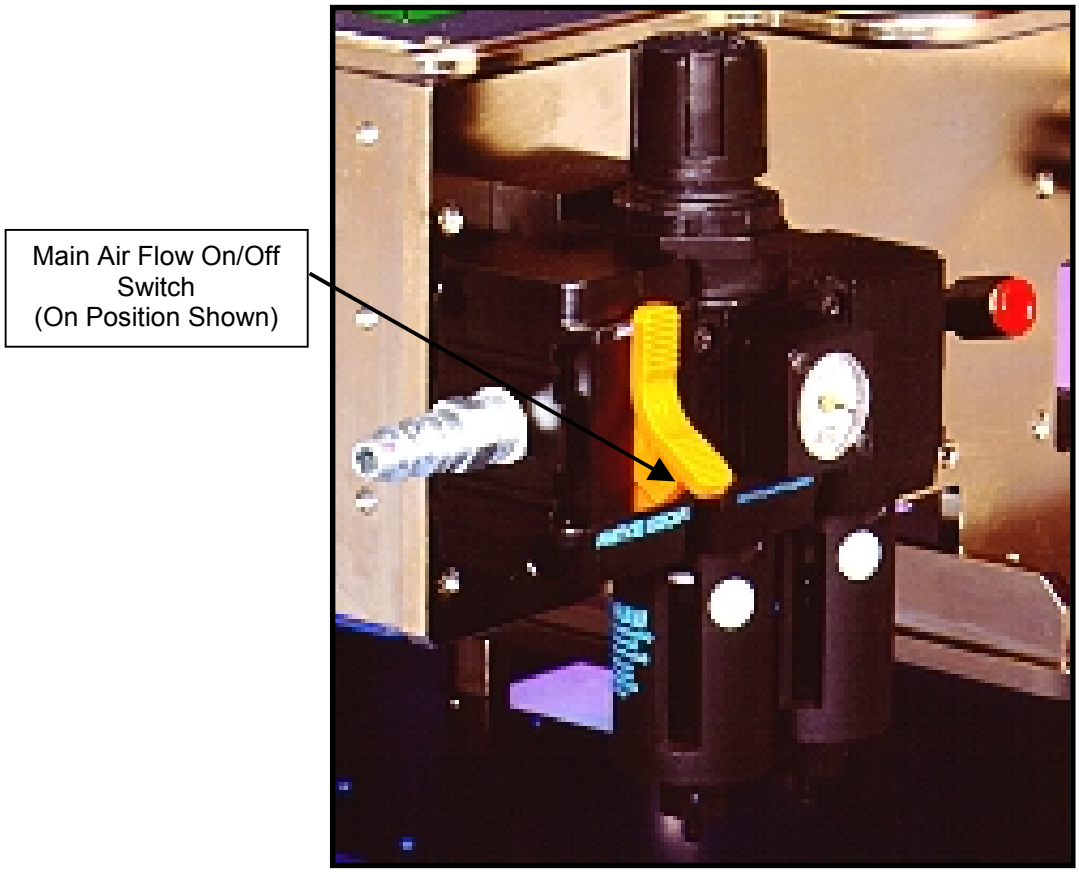

D. AIR OUTPUT. Connects to handler.

E. AIR INPUT. Connects to factory air supply. Air regulators from EXATRON are equipped with pneumatic Quick Disconnect part #P341. A mating quick disconnect may be purchased by ordering EXATRON part #D341. If you choose to use a different type of quick disconnect, replace the EXATRON-supplied part as necessary. EXATRON stocks only one type of air regulator quick disconnect.

F. COALESCING AIR FILTER.

G. MOISTURE TRAP.

H. MOUNTING BLOCK.

Vacuum Generator Maintenance Guidelines

Some EXATRON Changeover Kits contain a vacuum generator (a.k.a. "venturi") to create the vacuum used in the operation of the specific kit.

Please refer to **FIGURE 7-3** following this section for vacuum generator assembly mechanical details. Please note that in some cases, the venturi assembly will not include the control valves. Please refer to the manufacturer's data sheet, "PISCO Vacuum Switch," in Chapter 10 of this manual for additional information.

To Order from EXATRON:

PISCO VACUUM GENERATOR ASSEMBLY WITH CONTROL VALVES, PART #VGH10F-1/4-1/4.
PISCO VACUUM GENERATOR ASSEMBLY WITHOUT CONTROL VALVES, PART #VGH10B-1/4-1/4.
REPLACEMENT AIR FILTER, PART #VGFE10.

1. Inspect the vacuum generator's air filter weekly. The filter should be clean and white. These filters can be cleaned, however, EXATRON highly recommends *replacing* dirty filters with new filters instead. How frequently you need to replace the vacuum generator filter is a function of how clean your environment is and how clean the devices being run are.

***REMEMBER*: A Dirty Filter = Poor Handler Operation.**

DIRTY FILTER

CLEAN FILTER

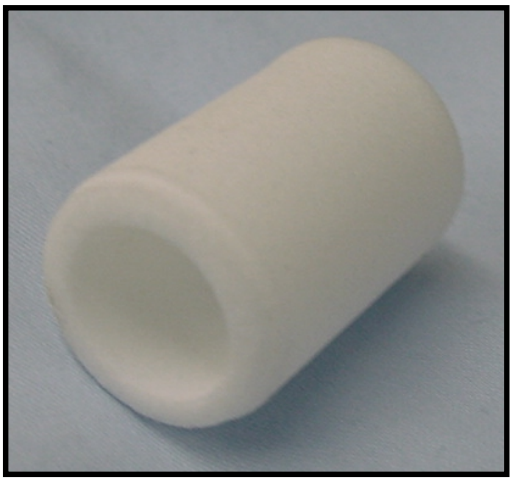

2. Check the vacuum sensor adjustment. First, be aware that the vacuum sensor adjustment is a 270° total turn potentiometer. **If you try to turn it more than the 270° allowed, it will break. The vacuum generator is an expensive component and abuse is not covered by the EXATRON warranty.**

   The red indicator LED on the vacuum generator should normally be off. Turn on the vacuum using the handler's yellow vacuum override button. The red indicator LED will remain off. Cover the vacuum hole in the handler plunger/apply head with one device. (You may also cover the vacuum hole with the end of your finger, although this may not be as accurate.) You will hear a noticeable change in the sound of the vacuum as it intercepts the device (or your finger) and the red indicator LED should turn on.

   If the red LED does not turn on, adjust as needed by carefully turning the potentiometer clockwise until the red LED comes on.
3. If the valves in the vacuum generator assembly become plugged with dirt, you may send the assembly back to EXATRON Customer Service where it will be repaired, if possible, for a fee. ***REMEMBER*: Damage caused by a dirty air supply is not covered by the EXATRON warranty.**

   If you are experiencing dirt-clogged vacuum generator valves, check the air regulator. Verify that it is clean and properly installed. Please refer to the Air Regulator Maintenance Guidelines section earlier in this chapter, and as always, contact the EXATRON factory for assistance as needed.
   Our toll-free telephone number is 1-800-EXA-TRON.

FIGURE 7-3
VENTURI/VACUUM GENERATOR

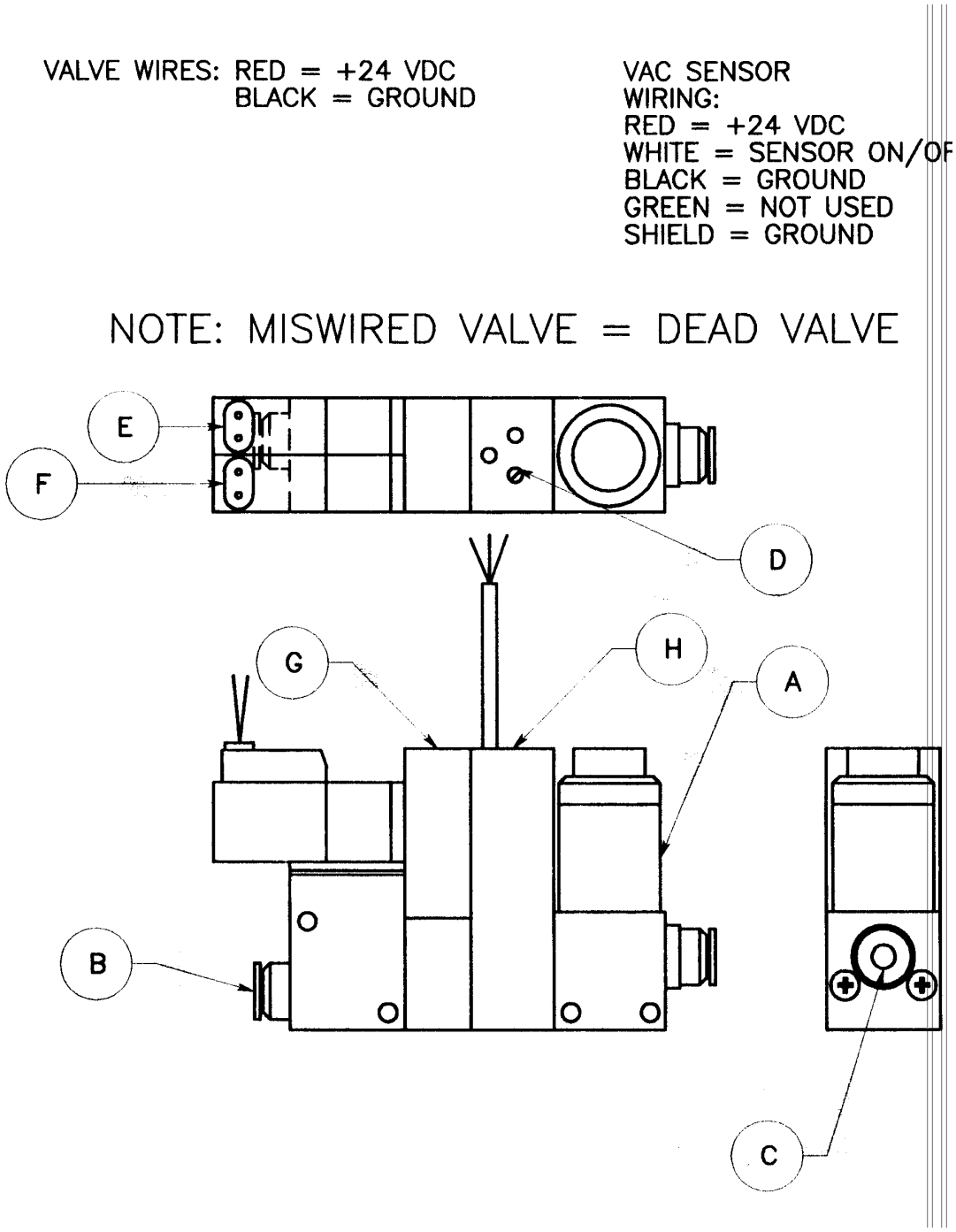

FIGURE 7-3

A. VACUUM FILTER.

B. AIR INPUT. *Typically 80 PSI, +/- 3 PSI.*

C. VACUUM PORT. *Connects to Pick Up/Apply Head.*

D. VACUUM SENSOR ADJUSTMENT POTENTIOMETER.

E. VACUUM ON VALVE.

F. AIR ON VALVE. *Blow-off.*

G. VENTURI GENERATOR.

H. VACUUM SWITCH ASSEMBLY.

Drawings

OVERVIEW

2710-E11-1-A
MODEL 5200 MAIN ASSEMBLY

MECHANICAL

#2710-E11-2-A
MODEL 5200 SIDE VIEW

#2710-E11-3-A
5200 TOP VIEW GANTRY & VALVE BOX

#2710-E11-4-A
5200 VALVE BOX ASSEMBLY

#2710-E11-5-A
5200 INPUT TRAY ASSEMBLY

#2710-E11-6-A
MODEL 5200 OUTPUT TRAY ASSEMBLY

#2710-E11-7-A
MSOP INDEX ASSEMBLY

#2710-E17-B1
TYPE 6 AIR CIRCUIT

#2710-H90-B
TYPE 6 TEST SITE ASSEMBLY DETAILS

#3000-664-2-D
CYLINDER MOD & INSTALLATION DETAIL

ELECTRICAL

#2710-D33-2-B
TRAY DISPLAY PCB, SCHEMATIC

#2710-D33-A1
TRAY DISPLAY PCB, ASSEMBLY

#2710-D81-2-A
OUTPUT TRAY SENSOR PCB, SCHEMATIC

#2710-D81-A
OUTPUT TRAY SENSOR PCB, ASSEMBLY

ELECTRICAL CON'T

#2710-E16-1-B1
SERVO MOTOR WIRING

#2710-E16-2-B1
QUAD VAC VALVE WIRING

#2710-E13-4-B1
INDEX VALVE WIRING

#2710-E16-5-C1
PICK UP HEAD VALVE WIRING

#2710-E18-A2
TYPE 6 TRAY DISPLAY ASSEMBLY

#271-E19-C
TYPE 6 SENSOR PCB WIRING

#27010-E60-A
TYPE 6 VALVE BOX CABLE

#3000-055-C
8085A CPU PCB, ASSEMBLY

#3000-055-C3
8085A CPU PCB, SCHEMATIC

#5000-396-2-A2
CARD CAGE BUS PCB, SCHEMATIC

#5000-396-B
CARD CAGE BUS PCB, ASSEMBLY

#5000-398-2-C
TEST SITE DRIVER PCB, SCHEMATIC

#5000-398-3-C
TEST SITE DRIVER PCB, ASSEMBLY

#5000-A89-C2
3000B FRONT PANEL PCB, SCHEMATIC

#5000-A89-C-3
3000B FRONT PANEL PCB, ASSEMBLY

#5000-L10-E1
AMBIENT 5000 INPUT POWER WIRING

#5000-L11-D
AMBIENT 5000 POWER SUPPLY WIRING

#5000-M15-A
FRONT PANEL CABLE

ELECTRICAL CON'T

#5000-M42-1-A1
CABLE TERMINATION PCB

#5000-M53-A
INPUT POWER BLOCK ASSEMBLY DETAIL

#5000-N15-1-A
DUAL UART / OUTPUT DOOR DISPLAY PCB, ASSEMBLY

#5000-N15-3-A1
DUAL UART / OUTPUT DOOR DISPLAY PCB, SCHEMATIC

PARTS LISTS

Overview

Following the descriptive guide below, is a Component Parts List for the your specific Model MSOP Hander. This Guide shows how to use the parts list to determine the exact part number of any custom part in your machine in order to replace it if necessary.

The Parts List contains those items which EXATRON has custom manufactured. They include machined parts, sheet metal, printed circuit boards, cables, and standard vendor parts which have been modified by EXATRON. A limited number of standard vendor parts are also listed here.

The title shown at the top of the list indicates the type of parts list. This should match your system's hardware. The parts list may change as EXATRON improves each model with each new generation. If you have different generations of the same model, the parts list will vary. Whenever possible, EXATRON makes design improvements capable of being retrofitted to older versions of the same model. The date on the parts list indicates the date of the last revision of the list, not necessarily the last revision of the system hardware.

Most systems will have two parts lists. One list is for the "base" system. This is the main section of the system and includes the power supply and the main electronics card cage. The second list is for the Changeover Kit. This kit assembles to the base to create a complete Handler. The changeover kit is basically the custom tracks, test site, lead-ins and tube holders which are unique in design to the specific device to be handled. Since it is quite possible to have several changeover kits for one base system, you will need a parts list for each changeover kit.

Parts List Guide - Descriptive Column Categories

1. "**PART NUMBER"**
   This is the number assigned by EXATRON to a specific part.
   The first four digits indicate the model number of the system for which the part was originally designed. We use parts from different models to lower inventory costs and to speed the design of "custom" handlers.

   The next three digits are simply the numerical count of the part as it was designed. These are the three numbers which are stamped or laser marked onto most machined parts. **The revision letter** of the part is listed next. This letter should be included when ordering replacement parts. EXATRON occasionally uses **additional letters or numbers** to indicate special features. We use **R** and **L** to specify right and left hand parts. **AM** or **HR** will indicate parts for Ambient Machines or Hot Rails. We use **62** or **75** to indicate specific sizes of solenoid plungers. There are other special notations which may be used as part of our numbering system and which may change with time. Please contact the EXATRON factory for assistance with any questions regarding special letters or numbers attached to part numbers.

2. **SECOND FIELD (This column title usually hidden to save space on printout.)**
   This indicates the quantity of the specific part used in the manufacture of this system. This information may be helpful in determining the correct part number and is used to build an assembly kit when your system was originally built.

3. **"DESCRIPTION"**
   This is the name assigned to the part. In most cases, this description will easily define the pat you wish to locate. Please include this description when ordering replacement parts.
4. **"ASSEMBLY"**
   Indicates which major system sub-assembly the part belongs to.
   In most cases, the "Assembly" can be ordered as a complete replacement part.

5. **"OPTIONS"**
   Some parts lists contain system options. "Options" indicates special parts which may be used in your system.

6. **"SIZE"**
   These are dimensions in inches. The dimensions are listed left to right from smallest to largest. This is the starting size of the part prior to being machined. A x B x C
   Imagine a cube drawn around a part you are trying to identify. The dimensions of this cube

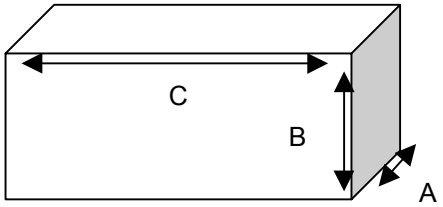

   can be checked against this size dimension and may be of assistance in determining a required part number. When the parts list indicates another EXATRON part number in the size column, then the part was made by modifying an existing EXATRON part. The modification is required for this handler only.

   When ordering replacement parts, be sure to use the part number and not the size. If the size column indicates, "see print," then the part is made from sheet metal, a PC board, or is something which is not made from a solid cube of material.

7. **"MATERIAL"**
   This designates the material from which the part was made. The "Material" column may also indicate the manufacturer of the part.

6061: 6061 aluminum, machined part.
5052: 5052 aluminum, sheet metal.
WHT DEL: White delrin, plastic.
BLK DEL: Black delrin, plastic.
DEL AF: Brown delrin, High-temperature plastic.
PEEK: Very high-temperature plastic, beige in color.
TORLON: Very high-temperature plastic, dark green in color.
G-7: High-temperature fiberglass, white in color.
G-10/FR-4:Standard fiberglass. Either green or blue used in printed circuit boards.
SS: Stainless steel. See print for exact type.
BRASS: Brass material.
PYREX: Pyrex glass, high-temperature, transparent.
LEXAN: Lexan plastic, high-temperature, transparent.
LEDEX: Ledex solenoid modification.
ULTEMP: Amber colored plastic, high-temp., transparent
EM: Electro-mechanical solenoid modification.
COPPER: Copper material.

8. "FINISH"

This designates the finish used on the part.

CLEAR: Clear anodizing, silver in color.
BLUE: Blue anodizing.
BLACK: Black anodizing.
RED: Red anodizing.
NEDOX: Conductive, hard finish, silver in color.
HCR: Non-conductive, hard finish, dark green in color.
NICKEL: Bright nickel plating, silver-chrome in color.
NONE: No finish, natural material.
PAINT: Painted part, colors may be beige, black or blue.

9. "KIT"

Indicates the quantity of this part that is supplied in a standard EXATRON spare parts kit.